Vietnamese-German University

COPYRIGHT WARNING

This paper is protected by copyright. You are advised to print or download **ONE COPY** of this paper for your own private reference, study and research purposes. You are prohibited having acts infringing upon copyright as stipulated in Laws and Regulations of Intellectual Property, including, but not limited to, appropriating, impersonating, publishing, distributing, modifying, altering, mutilating, distorting, reproducing, duplicating, displaying, communicating, disseminating, making derivative work, commercializing and converting to other forms the paper and/or any part of the paper. The acts could be done in actual life and/or via communication networks and by digital means without permission of copyright holders.

The users shall acknowledge and strictly respect to the copyright. The recitation must be reasonable and properly. If the users do not agree to all of these terms, do not use this paper. The users shall be responsible for legal issues if they make any copyright infringements. Failure to comply with this warning may expose you to:

VGU Vietnamese-German University

- Disciplinary action by the Vietnamese-German University.
- Legal action for copyright infringement.
- Heavy legal penalties and consequences shall be applied by the competent authorities.

The Vietnamese-German University and the authors reserve all their intellectual property rights.

Copyright

Vietnamese-German University

Faculty of Engineering

Shear and Punching Shear Design of Reinforced Concrete Structures according to the New Generation of Eurocode 2

Vietnamese-German University

Thesis

Submitted for the Degree of
Bachelor in Civil Engineering and Construction Management

Author
Dang My Kao Kim Nguyen
Matriculation No.: 18977 (VGU), 547864 (HBC)

Supervisors
Dr.-Ing. habil. Ngoc Linh Tran (VGU)
Prof. Dr.-Ing. Christian Kulas (HBC)

March 27, 2026

Dang My Kao Kim Nguyen

Shear and Punching Shear Design of Reinforced Concrete Structures according to the New Generation of Eurocode 2

Vietnamese-German University, Faculty of Engineering
Civil Engineering and Construction Management Program

Thesis No.: BCE-2026-01

This thesis is available for public access at the library of Vietnamese-German University (VGU). A digital version of the thesis may also be archived in the institutional repository of VGU, subject to the university's publication and copyright policies. For further information regarding access or citation, readers are encouraged to contact the university library.

VGU
Vietnamese-German University

Foreword

This thesis was carried out at the Vietnamese-German University within the Civil Engineering and Construction Management Program, Faculty of Engineering. I am grateful to my supervisors, Dr.-Ing. habil. Ngoc Linh Tran and Prof. Dr.-Ing. Christian Kulas, for their guidance, patience, and understanding throughout this thesis.

VGU
Vietnamese-German University

Abstract

This thesis examines how shear and punching shear design rules have changed from EN 1992-1-1:2004 to EN 1992-1-1:2023. The purpose is to evaluate how changes in design formulations influence the predicted strength of reinforced concrete beams and slabs, both with and without shear reinforcement, using parametric calculations.

The updated code introduces several key changes, including higher concrete strength classes up to C100/115, revised tensile strength expressions for high-strength concrete, and a modulus of elasticity that depends on the type of aggregate through the factor k_E. In addition, the new design strength format incorporates factors such as η_{cc} and time-dependent effects, resulting in a more conservative treatment of high-strength concrete, particularly when $f_{ck} > 40$ MPa.

For members without shear reinforcement, the new rules increase the minimum shear resistance for shallow elements, while applying a stronger size-effect reduction for deeper members. As a result, typical structural depths show higher predicted capacities, whereas larger sections are treated more conservatively. In contrast, the design rules for shear resistance with stirrups remain largely unchanged, apart from a new ductility-related limitation on $\cot\theta$ for Class A reinforcement.

In punching shear design, the results indicate capacities for thin slabs that are similar to or slightly higher than those in EN 1992-1-1:2004, whereas reduced resistance is observed for thick slabs and larger column dimensions. Furthermore, a new upper limit for reinforced slabs restricts the maximum achievable capacity at higher concrete strengths. Overall, EN 1992-1-1:2023 represents a shift toward a more mechanics-based approach, leading to improved robustness and a more realistic representation of structural behavior.

VGU
Vietnamese-German University

Zusammenfassung

Diese Arbeit untersucht die Entwicklung der Bemessungsregeln für Querkraft und Durchstanzen von EN 1992-1-1:2004 zur aktuellen EN 1992-1-1:2023. Ziel ist es, zu bewerten, wie Änderungen in den Bemessungsansätzen die vorhergesagte Tragfähigkeit von Stahlbetonbalken und -platten mit und ohne Querkraftbewehrung beeinflussen. Hierzu werden parametrische Berechnungen durchgeführt.

Die überarbeitete Norm führt mehrere wesentliche Änderungen ein, darunter erweiterte Festigkeitsklassen bis C100/115, angepasste Ansätze für die Zugfestigkeit von hochfestem Beton sowie einen vom Zuschlag abhängigen Elastizitätsmodul über den Faktor k_{E}. Darüber hinaus berücksichtigt das neue Bemessungskonzept Faktoren wie η_{cc} sowie zeitabhängige Einflüsse, was insbesondere bei hochfestem Beton mit $f_{\mathrm{ck}} > 40$ MPa zu einer konservativeren Bewertung führt.

Für Bauteile ohne Querkraftbewehrung erhöhen die neuen Regelungen den Mindestquerkraftwiderstand für schlanke Bauteile, während für größere Bauteiltiefen ein stärker ausgeprägter Größeneffekt angesetzt wird. Dies führt zu höheren berechneten Tragfähigkeiten für typische Bauteilabmessungen, während große Querschnitte konservativer bewertet werden. Im Gegensatz dazu bleiben die Bemessungsregeln für Bauteile mit Querkraftbewehrung weitgehend unverändert, abgesehen von einer zusätzlichen duktilitätsbezogenen Begrenzung von $\cot\theta$ für Bewehrung der Klasse A.

Bei der Durchstanzbemessung zeigen die Ergebnisse, dass dünne Platten ähnliche oder leicht höhere Tragfähigkeiten als nach EN 1992-1-1:2004 aufweisen, während für dicke Platten und größere Stützenabmessungen geringere Widerstände ermittelt werden. Zudem begrenzt eine neue obere Schranke für bewehrte Platten die maximal erreichbare Tragfähigkeit bei höheren Betonfestigkeiten. Insgesamt stellt EN 1992-1-1:2023 eine Weiterentwicklung hin zu einem stärker mechanisch begründeten und physikalisch konsistenteren Bemessungsansatz dar, der zu einer höheren Robustheit und einer realistischeren Abbildung des Tragverhaltens führt.

VGU
Vietnamese-German University

Notation

Latin symbols

$A_{c,y}$	effective concrete area in the y-direction
$A_{c,z}$	effective concrete area in the z-direction
A_{sl}	effective area of longitudinal tensile reinforcement extending beyond the considered section
A_{sw}	area of shear reinforcement
$A_{sw,min}$	minimum area of shear reinforcement within spacing s
a_{cs}	effective shear span at the control section
a_p	effective distance to the point of contra-flexure for punching shear
$a_{p,x}$	effective distance to the point of contra-flexure in the x-direction
$a_{p,y}$	effective distance to the point of contra-flexure in the y-direction
a_{pd}	alternative effective depth for punching shear verification
a_{sw}	shear reinforcement area per unit length, defined as A_{sw}/s
a_v	mechanical shear span parameter
b_0	perimeter of the support
$b_{0,5}$	control perimeter measured at a distance $0{,}5d_v$ from the support face
$b_{0,5,out}$	outer control perimeter beyond which punching shear reinforcement is no longer required in EC2:2023
$b_{b,max}$	maximum overall width of the control perimeter
$b_{b,min}$	minimum overall width of the control perimeter
b_b	characteristic width of the control perimeter
b_e	effective width used for eccentricity effects at edge columns
b_s	effective slab width used for the punching reinforcement ratio
b_w	web width of the member
c_1	column dimension
c_2	column dimension
c_v	offset parameter for punching shear reinforcement according to EC2:2023, used in the definition of $d_{v,out}$

VGU Vietnamese-German University

$C_{Rd,c}$	design coefficient for concrete shear resistance
d	effective depth of the member, measured from the outer edge of the member to the centroid of the longitudinal tensile reinforcement
d_{eff}	effective depth of slab or footing in punching shear verification according to EC2:2004
d_{dg}	aggregate-dependent size parameter accounting for the influence of aggregate size on shear transfer, defined as $16\,\text{mm} + D_{lower} \leq 40\,\text{mm}$ for $f_{ck} \leq 60$ MPa; $16\,\text{mm} + D_{lower}(60/f_{ck})^2 \leq 40\,\text{mm}$ for $f_{ck} > 60$ MPa
D_{lower}	lower sieve size of the coarse aggregate
d_v	shear-resisting effective depth in punching shear verification according to EC2:2023
$d_{v,x}$	effective depth in the x-direction for punching shear verification
$d_{v,y}$	effective depth in the y-direction for punching shear verification
$d_{v,out}$	shear-resisting effective depth outside the second reinforced perimeter
d_y	effective depth of reinforcement in the y-direction
d_z	effective depth of reinforcement in the z-direction
e	local distance of a control-perimeter element from the axis about which the moment acts
e_b	eccentricity of the resultant support force with respect to the centroid of the control perimeter
$e_{b,x}$	eccentricity of the resultant support force in the x-direction
$e_{b,y}$	eccentricity of the resultant support force in the y-direction
e_{par}	eccentricity parallel to the slab edge for edge-column punching verification
E_{cm}	secant modulus of elasticity of concrete
F_{cd}	compressive force in the concrete compression chord
F_{td}	tensile force in the longitudinal reinforcement chord
$F_{td,flex}$	tensile force due to flexure
$F_{td,total}$	total tensile force in the longitudinal reinforcement
f_{cd}	design compressive strength of concrete
f_{ck}	characteristic cylinder compressive strength of concrete
$f_{ck,ref}$	reference concrete strength used in the definition of η_{cc}
f_{cm}	mean compressive strength of concrete

VGU Vietnamese-German University

f_{ctd}	design tensile strength of concrete
$f_{ctk,0.05}$	5%-fractile characteristic tensile strength of concrete
f_{ctm}	mean axial tensile strength of concrete
f_{yd}	design yield strength of longitudinal reinforcement
f_{yk}	characteristic yield strength of reinforcement
f_{ywd}	design yield strength of shear reinforcement
$f_{ywd,eff}$	effective design yield strength of punching shear reinforcement
k	coefficient depending on the column dimensions in the eccentricity expression in EC2:2004
k_1	coefficient accounting for axial stress influence
k_E	aggregate-dependent coefficient for the modulus of elasticity of concrete
k_{pb}	punching shear gradient enhancement coefficient
k_{tc}	factor accounting for sustained load and loading time in the design compressive strength of concrete
k_{tt}	factor accounting for sustained load and loading time in the design tensile strength of concrete
k_{vp}	axial-force-related factor for shear resistance without shear reinforcement in EC2:2023
L	relevant span length used in punching approximations
L_x	span length in the x-direction
L_y	span length in the y-direction
$m_{Ed,x}$	design bending moment per unit width in the x-direction
$m_{Ed,y}$	design bending moment per unit width in the y-direction
M_{Ed}	design bending moment at the considered section
N_{Ed}	design axial force
$N_{Ed,y}$	design normal force in the y-direction
$N_{Ed,z}$	design normal force in the z-direction
N_{Vd}	additional tensile force due to shear truss action
s	spacing of shear reinforcement along the member axis
s_0	radial spacing parameter for punching shear reinforcement, measuring from the column face to the shear reinforcement
s_1	radial spacing parameter for punching shear reinforcement, measuring the distance between successive perimeters

VGU Vietnamese-German University

s_r	radial spacing of punching shear reinforcement
s_t	tangential spacing of punching shear reinforcement along the control perimeter
t_{ref}	reference age / reference loading time used in definitions of material property
u_i	investigated control perimeter
u_0	loaded perimeter at the column face in EC2:2004 punching verification
u_1	basic control perimeter in EC2:2004 punching verification
u_{out}	outer control perimeter in EC2:2004
$u_{out,ef}$	effective outer control perimeter beyond which punching shear reinforcement is no longer required in EC2:2004
V_{Ed}	design shear force at the considered section
$V_{Rd,c}$	design shear resistance without shear reinforcement
$V_{Rd,c,min}$	minimum design shear resistance without shear reinforcement
$V_{Rd,cc}$	shear resistance of the concrete compression chord
$V_{Rd,max}$	maximum design shear resistance governed by crushing of the concrete compression strut
$V_{Rd,s}$	design shear resistance provided by shear reinforcement
v_{Ed}	average punching shear stress on a control perimeter in EC2:2004
v_{min}	minimum shear stress resistance parameter in EC2:2004
$v_{Rd,c}$	design punching shear stress resistance without shear reinforcement in EC2:2004
$v_{Rd,cs}$	design punching shear stress resistance with shear reinforcement in EC2:2004
W_i	first moment of an investigated control perimeter
W_1	first moment of the basic control perimeter used for shear distribution due to moment transfer
x	depth of the compression zone
z	internal lever arm, usually approximated as $z \approx 0{,}9d$

VGU
Vietnamese-German University

Greek symbols

α	inclination angle of shear reinforcement in EC2:2004
α_{cw}	coefficient accounting for the stress state in the compression chord
α_{w}	inclination angle of shear reinforcement in the EC2:2023
β	eccentricity factor accounting for moment transfer in EC2:2004 punching shear
β_{e}	eccentricity factor accounting for concentration of shear forces in EC2:2023 punching shear
δ	angle used in the definition of b_w for sections with variable width
γ_{c}	partial safety factor for concrete
γ_{s}	partial safety factor for reinforcing steel
γ_{v}	partial safety factor for shear
ε_{x}	longitudinal strain parameter used in the refined EC2:2023 shear formulation
ε_{uk}	characteristic strain at maximum force of reinforcing steel
η_{c}	reduction factor for concrete contribution in punching shear with reinforcement
η_{cc}	reduction factor accounting for the difference between cylinder strength and effective structural compressive strength
η_{pm}	factor accounting for compressive membrane action in punching shear
η_{s}	shear enhancement factor accounting for cracking and shear redistribution in punching shear with reinforcement
η_{sys}	system factor depending on the type of punching shear reinforcement
ν	reduction factor for concrete in shear used in EC2:2023
ν_{1}	reduction factor for cracked concrete in shear used in EC2:2004
ρ_{l}	average longitudinal tensile reinforcement ratio
$\rho_{l,x}$	longitudinal reinforcement ratio in the x-direction
$\rho_{l,y}$	longitudinal reinforcement ratio in the y-direction
$\rho_{l,z}$	longitudinal reinforcement ratio in the z-direction
ρ_{w}	shear reinforcement ratio
$\rho_{w,min}$	minimum shear reinforcement ratio

$\rho_{w,req,min}$	required minimum shear reinforcement ratio in EC2:2023
σ_{cd}	design compressive stress in the concrete compression field or longitudinal direction
σ_{cp}	mean axial compressive stress in concrete at the cross-section
$\sigma_{c,y}$	average compressive stress in the y-direction
$\sigma_{c,z}$	average compressive stress in the z-direction
σ_{swd}	stress in inclined shear reinforcement when yielding is not fully attained
τ_{Ed}	design shear stress
τ_{Rd}	design shear stress resistance
$\tau_{Rd,c}$	design shear stress resistance without shear reinforcement
$\tau_{Rd,c,min}$	minimum design shear stress resistance without shear reinforcement
$\tau_{Rd,cs}$	design punching shear stress resistance with shear reinforcement
$\tau_{Rd,max}$	maximum design shear stress resistance
$\tau_{Rd,sy}$	design shear stress resistance provided by yielding of the shear reinforcement
θ	angle of the concrete compression strut
ϕ	bar diameter of longitudinal reinforcement
ϕ_w	diameter of punching shear reinforcement
$\phi_{w,max}$	maximum permitted diameter of punching shear reinforcement
ψ	slab rotation in the Critical Shear Crack Theory context

Note: Unless otherwise stated, the symbol c_v in EC2:2023 punching shear design denotes the offset parameter used in the definition of $d_{v,out}$. In the worked examples and parametric studies, c_v is used to denote the concrete cover where this is explicitly specified.

Contents

Foreword ii

Notation v

1 Introduction 1
- 1.1 General . . . 1
- 1.2 Motivation . . . 1
- 1.3 Scope . . . 2
- 1.4 Methodology . . . 2

2 Literature Review 3
- 2.1 Fundamentals of shear behavior in reinforced concrete . . . 3
  - 2.1.1 General behavior and failure characteristics . . . 3
  - 2.1.2 Shear transfer mechanisms . . . 3
  - 2.1.3 Influencing parameters . . . 4
- 2.2 Fundamentals of punching shear . . . 5
- 2.3 Development of analytical models for shear and punching shear . . . 7

3 Shear 10
- 3.1 The first generation of Eurocode 2 (EN 1992-1-1:2004) . . . 10
  - 3.1.1 Minimum shear resistance of concrete members . . . 10
  - 3.1.2 Shear resistance of concrete members without shear reinforcement . . . 10
  - 3.1.3 Shear resistance of concrete members with shear reinforcement . . . 11
  - 3.1.4 Minimum shear reinforcement requirements . . . 16
- 3.2 Limitations and motivation for revision . . . 18
- 3.3 The second generation of Eurocode 2 (EN 1992-1-1:2023) . . . 19
  - 3.3.1 Design shear stress . . . 19
  - 3.3.2 Minimum shear resistance of concrete members . . . 20
  - 3.3.3 Shear resistance of concrete members without shear reinforcement . . . 21
  - 3.3.4 Shear resistance of concrete members with shear reinforcement . . . 23
  - 3.3.5 Minimum shear reinforcement requirements . . . 27

4 Punching Shear 30
- 4.1 The first generation of Eurocode 2 (EN 1992-1-1:2004) . . . 30
  - 4.1.1 Relevant parameters . . . 30

4.1.2 Punching shear resistance of slabs and column bases without shear reinforcement . . . 36
4.1.3 Punching shear resistance of slabs and column bases with shear reinforcement . . . 38
4.1.4 Maximum punching shear resistance . . . 39
4.2 Limitations and motivation for revision . . . 40
4.3 The second generation of Eurocode 2 (EN 1992-1-1:2023) . . . 41
4.3.1 Relevant parameters . . . 41
4.3.2 Punching shear resistance of slabs without shear reinforcement . . . 49
4.3.3 Punching shear resistance of slabs with shear reinforcement . . . 52
4.3.4 Maximum punching shear stress resistance . . . 54

5 Results and Discussion 56
5.1 General material changes . . . 56
5.1.1 Concrete . . . 56
5.1.2 Reinforcing steel . . . 58
5.2 Shear . . . 60
5.2.1 Concrete members without shear reinforcement . . . 60
5.2.2 Concrete members with shear reinforcement . . . 64
5.2.3 Maximum shear resistance . . . 65
5.3 Punching shear . . . 67
5.3.1 Slabs without punching shear reinforcement . . . 67
5.3.2 Slabs with punching shear reinforcement . . . 70

6 Conclusion 73

A Comparison Tables 77

B Calculations 84
B.1 Shear Worked Example . . . 84
B.2 Punching Shear Worked Example . . . 89
B.3 Shear and Punching Calculations (EN 1992-1-1: 2004) . . . 97
B.4 Shear and Punching Calculations (EN 1992-1-1: 2023) . . . 104

Appendix 111

References 111

VGU Vietnamese-German University

List of Figures

2.1 Shear transfer along a crack (source: [1]) . . . 4
2.2 Punching shear failure at Pipe's Row parking in Wolverhampton, UK (source: [13]) . . . 6
2.3 Load-rotation relationship (source: [17]) . . . 6
2.4 Punching failure modes (source: [17]) . . . 7
2.5 Shear transfer (source: [18]) . . . 8
2.6 Theoretical principles of the Critical Shear Crack Theory: (a) load–rotation relationship, (b) crack kinematics, and (c) internal stresses (source: [17]) . . . 9

3.1 An illustration of truss model provided by EC2:2004 (source: EN 1992-1-1:2004, Figure 6.5) . . . 12
3.2 Definition of b_w for sections with variable width (source: EN 1992-1-1:2023, Figure 8.10) . . . 19
3.3 Partial safety factors for materials (source: EN 1992-1-1:2023, Table 4.3 (NDP)) 21
3.4 Definition of A_{sl} in Equation (3.23) (source: EN 1992-1-1:2023, Figure 8.7) . . . 22
3.5 Model and notation for shear reinforced members (source: EN 1992-1-1:2023, Figure 8.9) . . . 23

4.1 Control perimeters u_1 for typical support geometries and influence of nearby openings (source: EN 1992-1-1:2004, Figure 6.13, 6.14, and 6.15) . . . 32
4.2 Recommended values for β (source: EN 1992-1-1:2004, Figure 6.21N) . . . 33
4.3 Shear distribution due to an unbalanced moment at a slab-internal column connection (source: EN 1992-1-1:2004, Figure 6.19) . . . 34
4.4 Outer control perimeters u_{out} and $u_{out,ef}$ (source: EN 1992-1-1:2004, Figure 6.22) 35
4.5 Shear-resisting effective depth of the slab d_v considering the penetration of supports (source: EN 1992-1-1:2023, Figure 8.17) . . . 42
4.6 Control perimeters $b_{0,5}$ and b_0 (source: EN 1992-1-1:2023, Figure 8.19) . . . 42
4.7 Reduced control perimeters $b_{0,5}$ and b_0 (source: EN 1992-1-1:2023, Figure 8.18) 43
4.8 Control perimeters and shear-resisting effective depth d_v in members with variable depth (source: EN 1992-1-1:2023, Figure 8.20) . . . 43
4.9 Coefficients β_e accounting for the concentration of shear forces (source: EN 1992-1-1:2023, Table 8.3) . . . 44
4.10 Eccentricity and geometric mean of the control perimeter for edge columns (source: EN 1992-1-1:2023, Figure 8.21) . . . 45

VGU Vietnamese-German University

4.11 Control perimeters for punching shear reinforcement (source: EN 1992-1-1:2023, Figure 8.24) . . . 47
4.12 Definition of the effective depths in the punching shear analysis (Source: [11]) 47
4.13 Shear-resisting effective depth outside the second reinforced perimeter $d_{v,out}$ (source: EN 1992-1-1:2023, Figure 8.23). . . . 48
4.14 Definition of width b_s (source: EN 1992-1-1:2023, Figure 8.22) . . . 49
4.15 Different types of shear reinforcement (source: EN 1992-1-1:2023, Figure 12.6) 54

5.1 Compressive and tensile strength of concrete (source: EN 1992-1-1:2023, Table 5.1) . . . 56
5.2 Calculation of η_{cc} for concrete strength from C12/15 to C90/105 . . . 57
5.3 Design compressive strength f_{cd} versus concrete class according to EC2:2004, DIN EN 1992-1-1:2004/NA1, and EC2:2023 . . . 58
5.4 Properties of reinforcing steel according to EN 1992-1-1:2023 . . . 59
5.5 Influence of the aggregate parameter d_{dg} on the minimum design shear stress $\tau_{Rdc,min}$. For both cases, $\tau_{Rdc,min}$ decreases with increasing beam depth, while the larger value of d_{dg} gives consistently higher predicted values. . . . 61
5.6 Comparison of $\tau_{Rd,c}$ according to EC2:2004 and EC2:2023 over a range of beam depths for: (a) $d_{dg} = 40$ mm and (b) $d_{dg} = 32$ mm . . . 62
5.7 Shear resistance of concrete members without shear reinforcement as a function of concrete compressive strength f_{ck} according to EC2:2004 and EC2:2023 for different values of d_{dg}: (a) $h = 400$ mm and (b) $h = 675$ mm . . . 63
5.8 Comparison of the maximum shear stress in concrete strut $\tau_{Rd,max}$ between EN 1992-1-1:2004 and EN 1992-1-1:2023 from C12/15 to C90/105 . . . 66
5.9 Ratio of maximum shear stress allowed in concrete strut $\tau_{Rdc,max,2023}/\tau_{Rdc,max,2004}$ from C12/15 to C90/105 . . . 66
5.10 Ratio $V_{Rdc,2023}/V_{Rdc,2004}$ versus slab thickness for various concrete classes and aggregate sizes . . . 67
5.11 Comparison of the ratio $V_{Rdc,2023}/V_{Rdc,2004}$ for varying column sizes and slab thicknesses . . . 69
5.12 Comparison of the ratio $V_{Rd,max,2023}/V_{Rd,max,2004}$ for varying concrete compressive strength f_{ck}, showing the influence of the punching shear reinforcement arrangement for studs and for links and stirrups . . . 71

B1 Geometry and loading of the simply-supported beam used in the worked example 84
B2 Schematic reinforcement layout of the RC beam section used in the worked example . . . 88
B3 Plan view of the internal column and the control perimeter $b_{0,5}$ used in the punching verification . . . 89
B4 Peikko PSB System (Source: [21]) . . . 93

VGU Vietnamese-German University

List of Tables

4.1 Values of k (source: EN 1992-1-1:2004, Table 6.1) 34
4.2 Definition of the loaded perimeter u_0 according to EC2:2004 39

5.1 Effect of replacing d by the mechanical shear span a_v for different shear spans $a_{cs} = nd$ according to EN 1992-1-1:2023 64
5.2 Punching design coefficients and relative decrease for different column sizes . 69
5.3 Effect of replacing d_v with a_{pd} for different shear spans $a_p = nd_v$ 70

A1 Comparison of design actions and members without shear reinforcement in EC2:2004 and EC2:2023 78
A2 Comparison of members with shear reinforcement in EC2:2004 and EC2:2023 (Vertical) 79
A3 Comparison of members with shear reinforcement in EC2:2004 and EC2:2023 (Inclined) 80
A4 Comparison of general punching shear verification, control perimeter, and design stress in EC2:2004 and EC2:2023 81
A5 Comparison of punching shear resistance without shear reinforcement in EC2:2004 and EC2:2023 82
A6 Comparison of punching shear resistance with shear reinforcement in EC2:2004 and EC2:2023 83

B1 Given data for the simply-supported beam 84
B2 Given data for the punching shear example 89

1. Introduction

1.1 General

Eurocode 2 (EN 1992-1-1:2004) has served as the principal European standard for the design of concrete structures for more than two decades. Recently, the European Committee for Standardization approved the new generation of Eurocode 2 (EN 1992-1-1:2023) as part of the broader development of the second-generation Eurocode. According to the responsible CEN/TC 250 subcommittees, this revision aims to improve harmonization, clarity, and usability across structural design standards while incorporating findings from the extensive research carried out since the publication of the first generation. In this way, Eurocode 2 continues to represent one of the leading standards for concrete design.

1.2 Motivation

A central objective of the new generation is to establish a more transparent and consistent framework that improves usability without compromising safety. This objective is reflected in the adoption of design expressions based on general mechanical models for the verification of structural members. Significant revisions have been introduced in areas such as shear and punching shear design, crack control, and serviceability verification.

In light of these developments, and given the importance of shear and punching shear design in structural engineering practice, there is a clear need to understand how the updated provisions differ from the current standard and how these changes affect design practice. Against this background, the thesis examines and evaluates the changes introduced in the new generation of Eurocode 2 through a comparison with EN 1992-1-1:2004. The study is guided by the following research questions:

1. What are the main changes in shear and punching design in EN 1992-1-1:2023 (EC2:2023)?
2. How do these changes influence design results?
3. What are the implications for engineering practice?

By addressing these questions through a literature review, analytical comparisons, and practical design examples, the thesis provides a structured assessment of the new provisions introduced in EN 1992-1-1:2023 and their implications for shear and punching shear design. In doing so, it contributes to a better understanding of the transition from the first to the second generation of Eurocode 2 and provides practical insights for engineers and researchers working with the updated provisions.

VGU Vietnamese-German University

1.3 Scope

Given the breadth and complexity of comparing code provisions for shear and punching shear, and considering the limited scope of a bachelor's thesis, this study focuses on the general design approaches and main verification expressions for shear and punching shear as defined in Sections 8.2 and 8.4 of EN 1992-1-1:2023. Selected detailing rules are included where they are relevant to the understanding of the new parameters. However, the thesis neither aims to cover all detailing requirements nor to address all related topics such as strut-and-tie models and shear interfaces. The appendix contains worked examples that demonstrate the application of selected expressions and highlight key differences between the two generations.

1.4 Methodology

This thesis follows a methodology that combines a literature review, an analytical comparison of code provisions, and practical design examples. The approach consists of four stages:

1. Literature review of shear and punching behavior: A comprehensive review of scientific literature, textbooks, conference papers, fib Bulletins, and relevant code documents was conducted to establish the theoretical basis for shear and punching shear behavior in reinforced concrete. This chapter briefly discusses the fundamentals of shear and punching shear behavior and concludes with an overview of the underlying design models. These insights provide the mechanical background required to understand and evaluate the provisions of both generations of Eurocode 2.

VGU Vietnamese-German University

2. Comparative study of design provisions in EN 1992-1-1:2004 and EN 1992-1-1:2023: A systematic comparison was carried out between the current and the new generation of Eurocode 2. The comparison focuses on governing parameters and modelling assumptions, shear resistance of members with and without shear reinforcement, punching shear resistance with and without punching reinforcement, size-effect formulations, safety formats and partial factors, as well as the conceptual and mechanical differences between the two generations. Where appropriate, the equations were examined with regard to their consistency with mechanical principles and their expected influence on design outcomes.

3. Application to practical design examples: Design examples for beams and slabs were calculated under defined assumptions in order to demonstrate the application of both the current and the new design approaches and to illustrate their differences in a practical context.

4. Results and discussion: The findings from the literature review, comparative analysis, and design examples were then synthesized and discussed in order to evaluate the identified differences, including the limitations, advantages, and practical implications of the new generation of Eurocode 2 with respect to shear and punching shear design.

2. Literature Review

The shear and punching behavior of reinforced concrete has been widely studied over recent decades, leading to the development of numerous design approaches. Early models were primarily empirical and based on experimental data, while more recent research aims to establish a physically consistent understanding of the mechanisms governing shear resistance [17]. This review therefore focuses on the mechanisms and model developments that are most relevant for interpreting the evolution of shear and punching shear provisions in Eurocode 2.

2.1 Fundamentals of shear behavior in reinforced concrete

2.1.1 General behavior and failure characteristics

Although the behavior of reinforced concrete under bending is well established, the mechanisms that govern shear resistance are considerably more complex and less clearly defined [23]. Extensive experimental and theoretical investigations have sought to elucidate shear behavior, resulting in the development of semi-mechanical models grounded in empirical data. Nevertheless, significant challenges persist because shear resistance depends on multiple interacting parameters, and quantifying the relative importance of these factors remains difficult.

VGU
Vietnamese-German University

This uncertainty has significant implications for structural design, as shear failure can occur abruptly and with minimal warning. Unlike flexural failure, which is generally ductile, shear failure is often brittle and may result in collapse even when adequate bending capacity is present. As a result, shear design provisions are among the most conservative and strictly regulated elements of reinforced concrete design. This complexity explains why shear design provisions have historically relied on simplified and partly calibrated expressions, and why recent model developments seek a more mechanically transparent basis.

2.1.2 Shear transfer mechanisms

Shear in reinforced concrete results from the combined effects of bending moments and transverse loads. These actions produce non-uniform stress across the cross-section, leading to the development of principal tensile stresses, especially in regions of high shear near supports. When these stresses surpass the tensile strength of concrete, inclined cracks develop. After cracking, the capacity of uncracked concrete to transfer shear is significantly reduced, and internal forces are redistributed to alternative load-carrying mechanisms. The interaction and effectiveness of these mechanisms determine both the ultimate shear resistance and the deformation capacity of the member.

2.1.3 Influencing parameters

Shear resistance in cracked reinforced concrete is widely recognized as governed by several contributing mechanisms, including aggregate interlock along crack surfaces, residual tensile stresses transmitted across cracks, dowel action of longitudinal reinforcement, and compression struts within the uncracked concrete. The contribution of each mechanism depends on structural and material parameters and remains an active area of research.

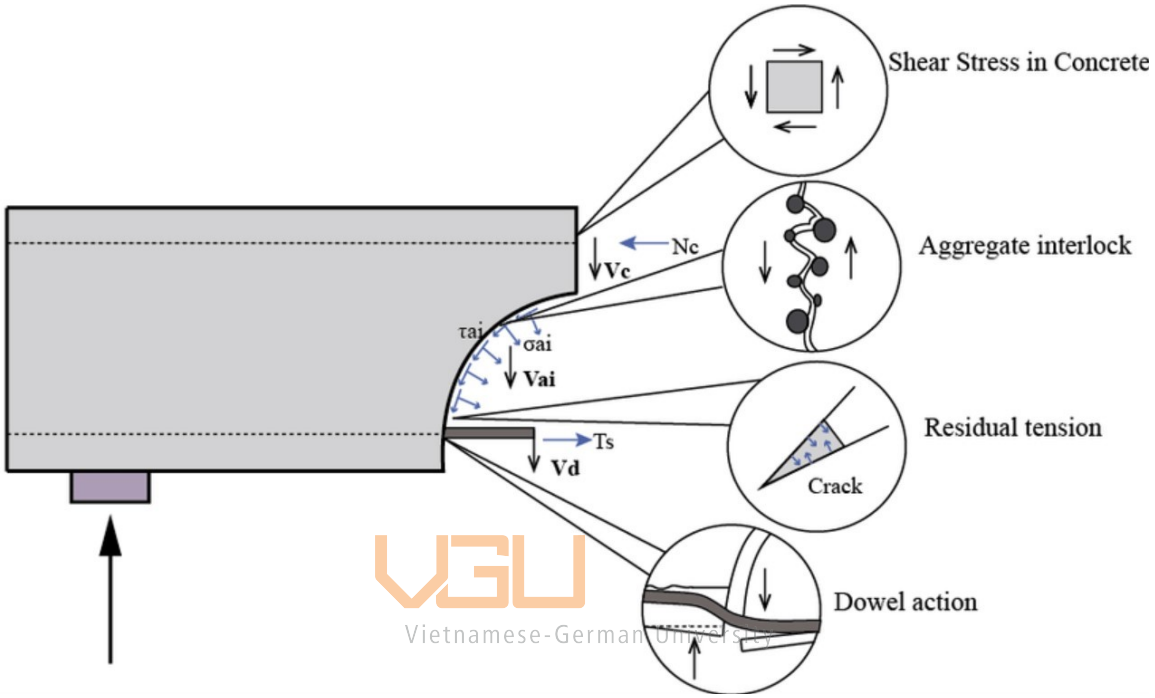

VGU
Vietnamese-German University

Figure 2.1: Shear transfer along a crack (source: [1])

Among these mechanisms, aggregate interlock V_{ai} in Figure 2.1, plays a dominant role in shear transfer. Rough crack surfaces enable shear stresses to be transmitted through physical interlocking as the crack faces slide relative to each other. However, this mechanism deteriorates with increasing crack width and slip, making it highly dependent on deformation, reinforcement ratio, and member stiffness [15].

Residual tensile stresses across cracks also contribute to shear resistance by bridging small cracks, particularly at early stages after cracking. Although their contribution is generally smaller than that of aggregate interlock, they remain relevant in members with limited crack opening.

Longitudinal reinforcement also helps through dowel action V_d, resisting relative displacement across cracks. The effectiveness of this mechanism relies on factors such as bar diameter, bond characteristics, anchorage conditions, concrete cover, and confinement [2].

The shear span-to-depth ratio is another key criterion influencing shear behavior, as it governs the mechanism of internal force transfer. Members with small shear span ratios tend to develop arching action, resulting in a pronounced compression strut mechanism, whereas

slender members rely more heavily on shear transfer across inclined cracks [12].

Additional influencing factors include axial forces, concrete tensile properties, and boundary conditions, all of which affect crack development, stiffness, and load redistribution within the structure. These dependencies demonstrate the complexity of shear behavior and its strong relationship with deformation.

When shear reinforcement is present, stirrups intersect diagonal cracks and act as tension ties, making a significant contribution to shear resistance. As crack widths increase, the relative contribution of shear reinforcement becomes more pronounced, while the contribution of concrete-based mechanisms diminishes.

To summarize, shear resistance in reinforced concrete is governed by multiple interacting mechanisms, with their relative contributions depending on deformation, crack width, member geometry, and detailing. This complexity makes shear behavior considerably more difficult to predict than flexural behavior. As a result, modern design approaches, including the latest generation of Eurocode 2, continuously adopt mechanically based models to better represent these interactions rather than relying solely on empirical formulations. This development marks a shift from force-based to deformation-based interpretations of shear behavior, in which crack width and structural deformation govern shear resistance.

2.2 Fundamentals of punching shear

Vietnamese-German University

Punching shear is a localized shear failure mode that occurs when a concentrated load punches through a member. Unlike shear cracking along a beam's span, punching failure in a slab-column connection is typically characterised by a truncated cone in shape, as illustrated in Figure 2.2.

Punching shear failure occurs in two modes: a brittle mode that occurs before the flexural reinforcement yields and a ductile mode that occurs after yielding. In the brittle mode, the slab reaches its punching shear capacity and fails suddenly with little warning. In contrast, ductile failure is characterized by yielding of the flexural reinforcement, which allows the slab to deform to a high degree and provides visible warning signs prior to collapse [20]. This behavior is associated with the slab's bending and rotational responses. As the slab deflects, it rotates around the column, forming cracks along a critical perimeter [18]. This progression gradually reduces the effectiveness of the aggregate interlock and the concrete strut mechanism [18]. Developing accurate punching models and ensuring safe structural designs requires a thorough understanding of the interactions among flexural deformation, crack propagation, and shear transfer mechanisms.

Punching shear capacity in flat slabs is determined by a combination of geometry, material strength, deformation, and other factors. The slab thickness, also known as the effective depth, is one of the most influential parameters. Thicker slabs generally provide higher resistance, while thinner or more slender slabs are more sensitive to size effects and to crack widening



Figure 2.2: Punching shear failure at Pipe's Row parking in Wolverhampton, UK (source: [13])

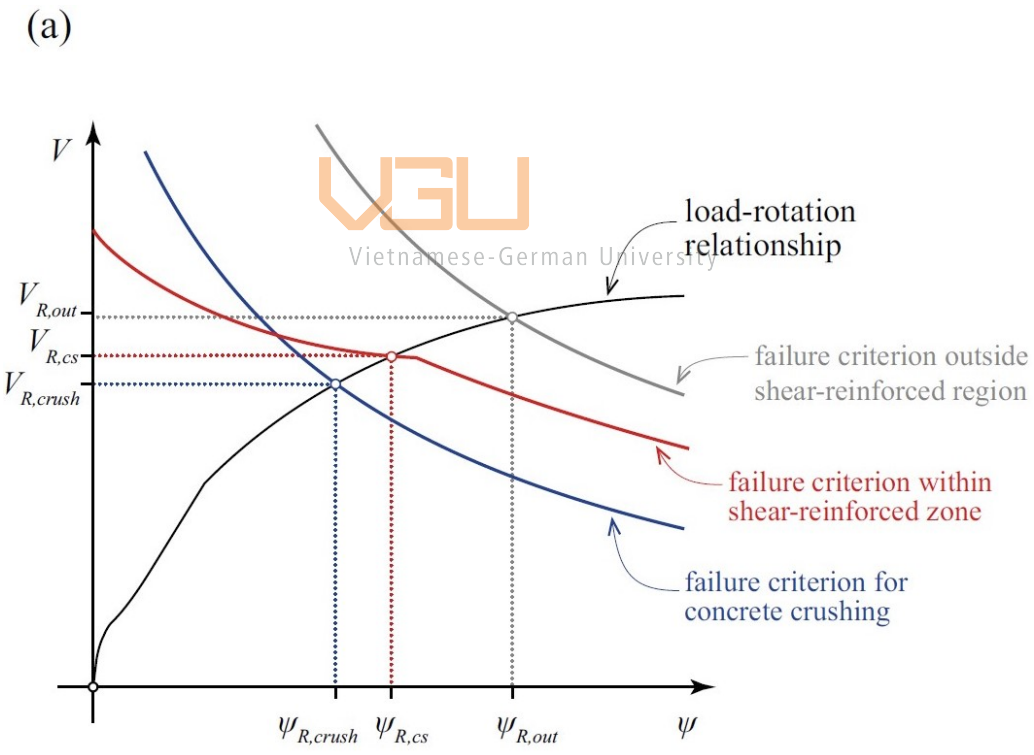

Figure 2.3: Load-rotation relationship (source: [17])

driven by deformation [18]. The geometry of the supported area also matters. Larger columns increase the critical perimeter and can therefore improve punching capacity [6]. Concrete strength enhances the compressive zone and improves resistance in the crucial section, though its benefits can be limited as cracks widen and aggregate interlock deteriorates [18].

Rotation at the slab-column connection has a strong effect on crack opening and on how

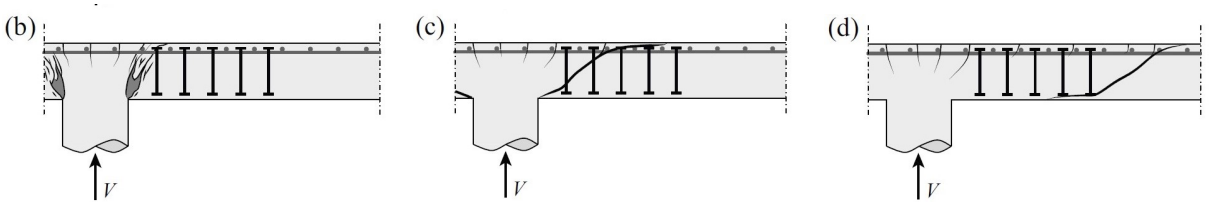

Failure criterion for concrete crushing | Failure criterion within shear-reinforced zone | Failure criterion outside shear-reinforced region

Figure 2.4: Punching failure modes (source: [17])

well shear forces are transferred after cracking [18]. Because of this, slab rotation is a key factor in modern mechanical models, which is present in the Critical Shear Crack Theory. Load eccentricity and unbalanced moments make the situation more complex by causing uneven stress and rotation around the control perimeter, which usually lowers capacity on the side under more tension [18]. Adding punching shear reinforcement, such as studs or stirrups that cross the potential failure surface, can greatly increase resistance and improve ductility [9].

To understand the differences between empirical models, semi-mechanical approaches, and the updated Eurocode 2 provisions, it is essential to examine how the governing parameters interact. Analysis of the Eurocode punching shear equations identifies key variables, including slab depth, column geometry, concrete strength, slab rotation and crack opening, load eccentricity and punching shear reinforcement.

VGU
Vietnamese-German University

2.3 Development of analytical models for shear and punching shear

Over the decades, models for shear and punching shear in reinforced concrete have gradually shifted from predominantly empirical formulations to approaches grounded more firmly in mechanics [17]. Early models related to shear capacity to basic parameters such as effective depth, reinforcement ratio, and concrete strength. Zsutty's work was particularly influential in establishing the empirical foundation that shaped earlier code formulations, including the 2004 Eurocode-style shear provisions [27].

As understanding of post-cracking behavior advanced, semi-empirical models began incorporating additional mechanisms such as aggregate interlock, dowel action, and residual tensile stresses. The physical contributions of these mechanisms to shear resistance are illustrated in 2.5.

Although these models still required calibration through experimental data, they represented an important step toward improving the physical interpretation of shear behavior. Nevertheless, the influence of deformation and crack width was only indirectly captured. A major development during this period was the emergence of the Compression Field Theory, and in particular the Modified Compression Field Theory (MCFT). By combining equilibrium, com-

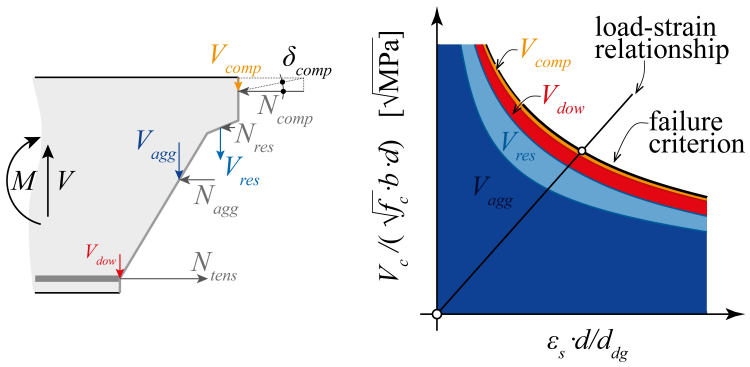

Figure 2.5: Shear transfer (source: [18])

patibility, and material behavior, MCFT provided a strain-based explanation for shear transfer [24]. Its simplified code-oriented versions improved prediction reliability and significantly influenced modern shear design provisions internationally [24].

The CSCT approach explains punching shear based on fundamental mechanics rather than primarily on empirical formulas. It starts from the observation that punching failure is governed by the formation of a critical shear crack surrounding the column [17].

According to CSCT, the width and inclination of this crack are determined by the degree of slab rotation and the manner in which the column induces shear deformation in the slab. Thus, the flexural response of the slab directly affects the development of the shear crack and the slab's shear resistance. By integrating flexural behavior—including reinforcement, stiffness, and deformation—with shear behavior, CSCT provides a mechanically grounded model for predicting punching capacity. This approach consistently and transparently incorporates the contributions of concrete, flexural reinforcement, and punching shear reinforcement.

Traditional empirical code methods, such as those used in ACI 318-19 and EN 1992-1-1:2004, adopt a different approach [27]. Rather than modeling the mechanics of shear crack formation, these codes employ formulas derived from extensive experimental data. They use empirical factors, numerical values obtained by calibrating design equations against laboratory results. These factors are intended to ensure safety and reasonable accuracy across diverse slab geometries, concrete strengths, and reinforcement configurations. However, such methods do not necessarily represent the underlying mechanical processes during failure; instead, they offer practical and simplified design rules validated through experimental testing.

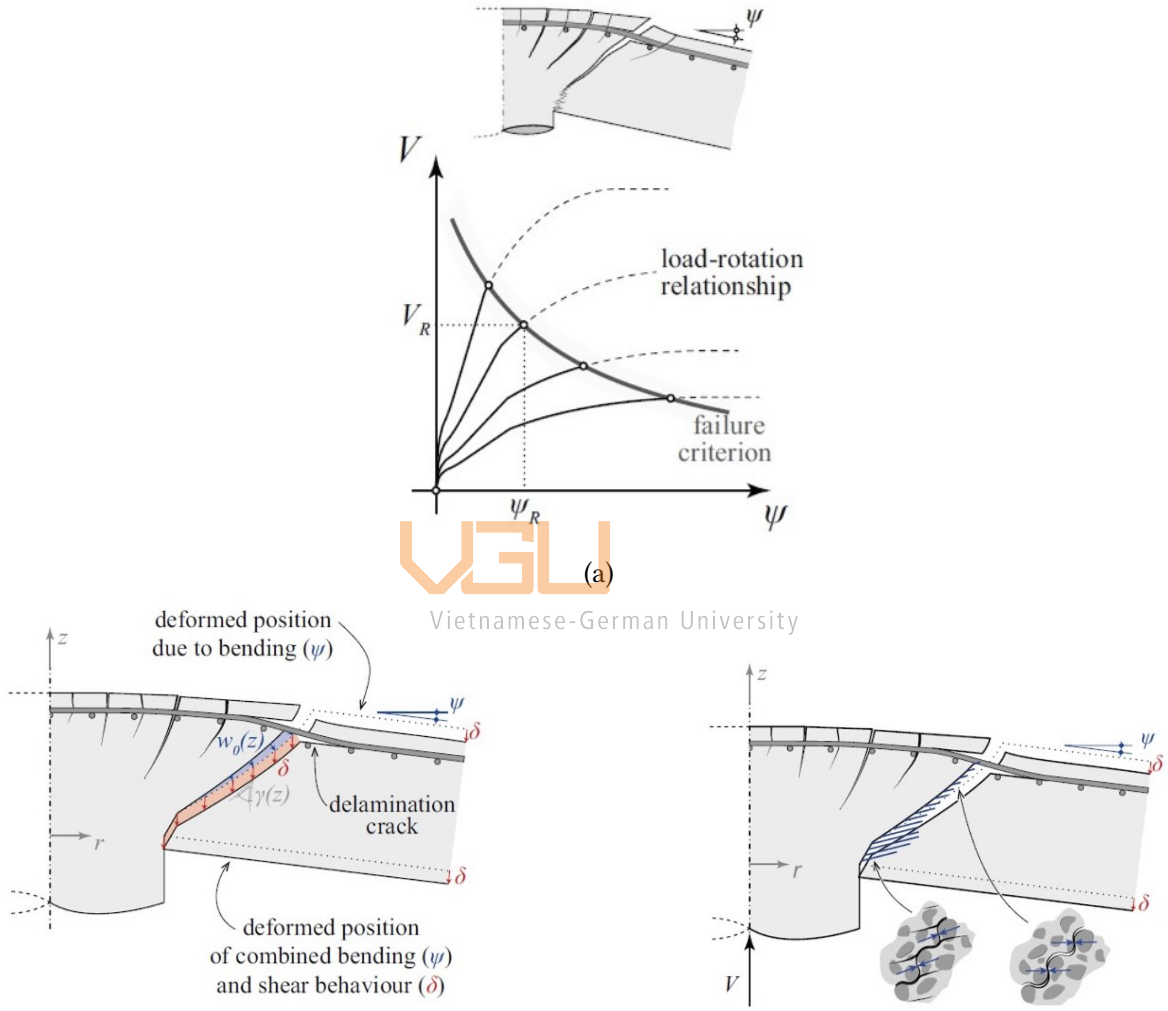

VGU
Vietnamese-German University

Figure 2.6: Theoretical principles of the Critical Shear Crack Theory: (a) load–rotation relationship, (b) crack kinematics, and (c) internal stresses (source: [17])

3. Shear

This chapter examines design approaches for shear in reinforced concrete according to the current and the new generation of Eurocode 2. After outlining the existing code formulation and its motivation for changes, the revised formulation and its underlying rationale are discussed.

3.1 The first generation of Eurocode 2 (EN 1992-1-1:2004)

The shear provisions in the current EC2 (EC2:2004) are based on empirical methods. Concrete shear resistance without shear reinforcement is determined using formulae calibrated from experimental test series, which incorporate parameters including effective depth, longitudinal reinforcement ratio, and concrete strength.

In EC2:2004, shear resistance is primarily expressed in terms of design shear forces. The underlying formulations were calibrated against experimental results and incorporate the influence of relevant parameters indirectly through empirical coefficients, rather than by explicitly modelling the governing shear-transfer mechanisms.

VGU
Vietnamese-German University

3.1.1 Minimum shear resistance of concrete members

The minimum shear resistance of concrete members is expressed through the lower-bound shear stress as follows:

$$V_{\mathrm{Rd,c,min}} = (v_{\mathrm{min}} + k_1 \cdot \sigma_{\mathrm{cp}})\, b_{\mathrm{w}} \cdot d \tag{3.1}$$

$$v_{\mathrm{min}} = 0{,}035 \cdot k^{3/2} \cdot f_{\mathrm{ck}}^{1/2} \tag{3.2}$$

where the factor $k = 1 + \sqrt{\frac{200}{d}}$ introduces an implicit size effect for members with larger effective depths. This lower bound ensures that cracked reinforced concrete members retain a minimum shear capacity, although the individual physical mechanisms are not explicitly factored in the code.

3.1.2 Shear resistance of concrete members without shear reinforcement

For members without shear reinforcement, the current EC2 provides an empirical expression for concrete shear resistance:

$$V_{\mathrm{Rd,c}} = \left[C_{\mathrm{Rd,c}} \cdot k \cdot (100 \cdot \rho_{\mathrm{l}} \cdot f_{\mathrm{ck}})^{1/3} + k_1 \cdot \sigma_{\mathrm{cp}}\right] b_{\mathrm{w}} \cdot d \tag{3.3}$$

where

$C_{Rd,c}$ design coefficient for concrete shear resistance with $C_{Rd,c} = \frac{0{,}18}{\gamma_c}$

k size-effect factor, defined as $k = 1 + \sqrt{\frac{200}{d}}$ (with $k \leq 2{,}0$)

ρ_l longitudinal tensile reinforcement ratio

f_{ck} the characteristic cylinder compressive strength of concrete

k_1 the coefficient accounting for axial stress influence

σ_{cp} the mean axial stress in the concrete at the cross-section

b_w the web width

d effective depth of the member, measured from the outer edge of the member to the centroid of longitudinal tensile reinforcement

The coefficient $C_{Rd,c}$ is an empirical calibration factor that represents the contribution of concrete to the shear resistance of members without shear reinforcement. It accounts for the combined effects of shear transfer mechanisms such as aggregate interlock, dowel action of the longitudinal reinforcement, and the residual tensile capacity of cracked concrete. Since these mechanisms are complex and difficult to model explicitly, they are incorporated into a single coefficient derived from experimental observations.

In EN 1992-1-1:2004, the recommended value for $C_{Rd,c}$ is $\frac{0{,}18}{\gamma_c}$, where γ_c is the partial safety factor for concrete which is 1,5. This formulation indicates that $C_{Rd,c}$ represents a design value rather than a characteristic value, as it already includes safety considerations. National Annexes may modify this coefficient to reflect different levels of conservatism; for instance, the German National Annex adopts a reduced value of $\frac{0{,}15}{\gamma_c}$. Consequently, the choice of $C_{Rd,c}$ directly influences the predicted shear resistance, with lower values leading to more conservative designs.

The governing resistance is taken as the larger of the shear capacity of concrete $V_{Rd,c}$ or the minimum shear resistance $V_{Rd,c,min}$. While this expression accounts for key parameters such as member depth, reinforcement ratio, and concrete strength, it remains an empirical force-based model. The effects of deformation, crack width, and strain are not explicitly considered, and the contributions of individual shear-transfer mechanisms cannot be quantified separately.

3.1.3 Shear resistance of concrete members with shear reinforcement

Truss model and angle θ

In EN 1992-1-1:2004, the shear resistance of a concrete member with shear reinforcement is described using the traditional truss model. After the formation of diagonal shear cracks, the

tensile capacity of the concrete across the crack is no longer effective in transmitting shear. As a result, a truss mechanism is adopted, in which the shear reinforcement, such as stirrups or links, acts as tension ties, while the concrete between the cracks forms inclined compression struts. In this stage, the applied shear force is resisted by the interaction between the tensile forces in the shear reinforcement and the compressive forces in the concrete struts.

A key aspect of this model is the inclination angle θ of the diagonal compression strut. A larger value of θ, corresponding to a steeper compression strut, reduces the shear resistance provided by the stirrups and therefore increases the required amount of shear reinforcement. At the same time, the compressive stress in the concrete strut is reduced. Conversely, a smaller value of θ, corresponding to a flatter compression strut, increases the contribution of the stirrups and can reduce the required shear reinforcement, but leads to higher compressive stresses in the concrete strut, which may govern the design through strut crushing.

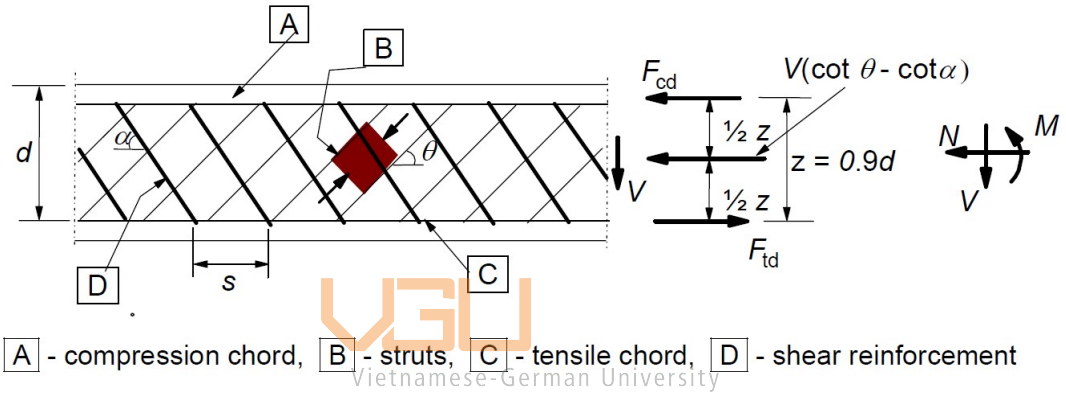

VGU Vietnamese-German University

Figure 3.1: An illustration of truss model provided by EC2:2004 (source: EN 1992-1-1:2004, Figure 6.5)

To avoid unrealistic or unsafe stress states, EC2:2004 imposes an explicit limit on the angle θ as written in Equation (3.4), allowing designers to optimize the required amount of shear reinforcement.

In addition, it is worth noting that the German National Annex permits a larger upper limit of $\cot\theta$ than the recommended value in EC2:2004. This may reduce the required amount of shear reinforcement in design; however, it also increases the reliance on the concrete compression field. As the allowable maximum is 3,0 instead of 2,5 as described in Equation (3.5) for vertical shear reinforcement and Equation (3.6) for inclined shear reinforcement.

$$1{,}0 \leq \cot\theta \leq 2{,}5 \tag{3.4}$$

$$1{,}0 \leq \cot\theta \leq \frac{1{,}2 + 1{,}4\,\sigma_{cd}/f_{cd}}{1 - V_{Rd,cc}/V_{Ed}} \leq 3{,}0 \tag{3.5}$$

$$0{,}58 \leq \cot\theta \leq \frac{1{,}2 + 1{,}4\,\sigma_{cd}/f_{cd}}{1 - V_{Rd,cc}/V_{Ed}} \leq 3{,}0 \tag{3.6}$$

In the German National Annex of EC2, the limitation of the angle θ is linked to the shear

resistance of the concrete compression zone, expressed through $V_{\mathrm{Rd,cc}}$. This formulation accounts for the interaction between shear and compressive stresses. As σ_{cd} increases, $V_{\mathrm{Rd,cc}}$ decreases meaning that the effective shear capacity of the concrete compression zone decreases. Consequently, this leads to a reduction in the admissible range of cot θ, i.e. limiting the use of smaller angles θ as described in Equation (3.5) and Equation (3.6).

$$V_{\mathrm{Rd,cc}} = c \cdot 0{,}48 \cdot f_{\mathrm{ck}}^{1/3} \left(1 - 1{,}2 \cdot \frac{\sigma_{\mathrm{cd}}}{f_{\mathrm{cd}}}\right) b_{\mathrm{w}} \cdot z \tag{3.7}$$

where

c calibration coefficient, taken as 0,5

σ_{cd} design value of the longitudinal compressive stress in concrete

b_{w} web width of the concrete member

z internal lever arm, approximated by $z \approx 0{,}9 \cdot d$

For simplification, DIN EN 1992-1-1/NA also gives the following limits for cot θ:

- Pure bending: $\cot\theta = 1{,}2$
- Bending with normal force: $\cot\theta = 1{,}2$
- Bending with tensile force: $\cot\theta = 1{,}0$

Vietnamese-German University

Within this allowable range, designers may select θ to optimize the balance between reinforcement demand and concrete compression capacity. As a result, θ becomes a central design parameter, directly influencing the required shear reinforcement and the governing failure mechanism. However, the model provides only a simplified representation of the concrete strut behavior and has been criticized for insufficient physical grounding, particularly with regard to strut crushing, crack-angle evolution, and the behavior of high-strength concrete. These limits ensure compatibility with typical crack angles, avoid crushing in the concrete strut, ensure sufficient engagement of the shear reinforcement, and maintain consistency with experimental observations.

Shear resistance provided by shear reinforcement

If the applied design shear force exceeds the shear resistance of a member without shear reinforcement, $V_{\mathrm{Ed}} > V_{\mathrm{Rd,c}}$, additional shear reinforcement must be provided. In EN 1992-1-1:2004, the behavior of such members is described using a simplified truss model as shown in Figure 3.1.

After diagonal cracks form in the concrete, the tensile capacity of the concrete across the crack is no longer effective. As a result, the internal force transfer changes: the shear force is

carried by a combination of inclined compression forces in the concrete and tensile forces in the shear reinforcement. The shear reinforcement, typically in the form of stirrups or links, acts as tension ties within this truss-like system.

For vertical stirrups, the shear resistance provided by the reinforcement is given by

$$V_{\text{Rd,s}} = \frac{A_{\text{sw}}}{s} \cdot z \cdot f_{\text{ywd}} \cdot \cot\theta \tag{3.8}$$

This expression can be rearranged to determine the required amount of shear reinforcement per unit length:

$$a_{\text{sw}} = \frac{A_{\text{sw}}}{s} = \frac{V_{\text{Ed}}}{z \cdot f_{\text{ywd}} \cdot \cot\theta} \tag{3.9}$$

For inclined shear reinforcement, the corresponding equation becomes

$$V_{\text{Rd,s}} = \frac{A_{\text{sw}}}{s} \cdot z \cdot f_{\text{ywd}} \cdot (\cot\theta + \cot\alpha) \cdot \sin\alpha \tag{3.10}$$

and the required reinforcement is

$$a_{\text{sw}} = \frac{A_{\text{sw}}}{s} = \frac{V_{\text{Ed}}}{z \cdot f_{\text{ywd}} \cdot (\cot\theta + \cot\alpha) \cdot \sin\alpha} \tag{3.11}$$

where

VGU Vietnamese-German University

A_{sw}	total area of shear reinforcement within spacing s
s	spacing of the shear reinforcement
a_{sw}	shear reinforcement per unit length (A_{sw}/s)
z	internal lever arm (approximately $z \approx 0.9d$)
f_{ywd}	design yield strength of the shear reinforcement
θ	angle of the concrete compression strut relative to the beam axis
α	angle of the shear reinforcement relative to the beam axis

The angle θ plays an important role in the design. Since $V_{\text{Rd,s}}$ is proportional to $\cot\theta$, smaller values of θ lead to higher shear resistance provided by the reinforcement. This means that less reinforcement is required. However, reducing θ also increases the compressive stresses in the concrete, which may lead to failure of the concrete compression strut. For this reason, the value of θ is limited in design.

$$\downarrow \theta \Rightarrow \uparrow \cot\theta \Rightarrow \uparrow V_{\text{Rd,s}} \tag{3.12}$$

Inclined shear reinforcement can be more effective than vertical stirrups because it aligns more closely with the internal flow of force. This is reflected in the additional terms in the

equation, which generally lead to a higher shear resistance for the same amount of reinforcement. However, in practice, vertical stirrups are more commonly used due to their simplicity in construction, resulting in more efficient execution and potentially reducing on-site labor cost.

It should be noted that $V_{\mathrm{Rd,s}}$ represents only the contribution of the shear reinforcement. The total shear resistance is also limited by the capacity of the concrete compression strut, which is considered separately in the following part.

Maximum shear resistance of the compression strut $V_{\mathrm{Rd,max}}$

In addition to the shear resistance provided by the reinforcement, the capacity of the concrete compression strut must also be verified in order to prevent crushing failure. For this purpose, EN 1992-1-1:2004 defines the maximum design shear resistance $V_{\mathrm{Rd,max}}$, which represents the upper limit of shear resistance governed by the concrete compression field.

According to EN 1992-1-1:2004, Equation (3.13) applies to members with vertical shear reinforcement, whereas Equation (3.14) applies to members with inclined shear reinforcement.

$$V_{\mathrm{Rd,max}} = \frac{\alpha_{\mathrm{cw}} \cdot b_{\mathrm{w}} \cdot z \cdot \nu_1 \cdot f_{\mathrm{cd}}}{\cot\theta + \tan\theta} \tag{3.13}$$

$$V_{\mathrm{Rd,max}} = \frac{\alpha_{\mathrm{cw}} \cdot b_{\mathrm{w}} \cdot z \cdot \nu_1 \cdot f_{\mathrm{cd}} \cdot (\cot\theta + \cot\alpha)}{1 + \cot^2\theta} \tag{3.14}$$

VGU Vietnamese-German University

where

- α_{cw} coefficient accounting for the influence of stress in the compression chord; for members without prestressing, a value of 1.0 is recommended
- b_{w} web width of the member
- z internal lever arm, approximated as $z \approx 0.9d$
- ν_1 reduction factor accounting for the reduced compressive strength of cracked concrete in shear, usually taken as $\nu_1 = 0{,}6\left(1 - \frac{f_{\mathrm{ck}}}{250}\right)$
- f_{cd} design value of the concrete compressive strength
- θ angle between the concrete compression strut and the longitudinal axis of the member
- α angle between the shear reinforcement and the longitudinal axis of the member

The verification of $V_{\mathrm{Rd,max}}$ is necessary because the shear resistance cannot be increased indefinitely by providing more shear reinforcement. Although a smaller angle θ increases the shear resistance provided by the stirrups, it also increases the compressive stress in the concrete strut. If this stress becomes too high, crushing of the concrete may occur before the

shear reinforcement reaches its full capacity. Therefore, the final design must satisfy both the reinforcement criterion and the compression strut criterion.

Verification of shear resistance of concrete members with shear reinforcement

For members with shear reinforcement, the design verification according to EN 1992-1-1:2004 requires that the applied design shear force does not exceed either the resistance provided by the shear reinforcement or the maximum resistance of the concrete compression strut. Accordingly, the following conditions shall be satisfied:

$$V_{\mathrm{Ed}} \leq V_{\mathrm{Rd,s}} \tag{3.15}$$

$$V_{\mathrm{Ed}} \leq V_{\mathrm{Rd,max}} \tag{3.16}$$

Hence, the overall verification may be written as

$$V_{\mathrm{Ed}} \leq \min\left(V_{\mathrm{Rd,s}}, V_{\mathrm{Rd,max}}\right) \tag{3.17}$$

Thus, the shear design is governed by the smaller of the two resistances. While $V_{\mathrm{Rd,s}}$ describes the contribution of the shear reinforcement, $V_{\mathrm{Rd,max}}$ limits the design by the crushing capacity of the concrete compression strut. Consequently, a sufficient amount of stirrups alone does not guarantee safety, since the concrete compression field must also remain within its admissible resistance.

VGU
Vietnamese-German University

The final verification therefore requires a consistent choice of the strut inclination angle θ, since this parameter influences both $V_{\mathrm{Rd,s}}$ and $V_{\mathrm{Rd,max}}$. The design is satisfactory only when the applied shear force fulfills both criteria simultaneously.

3.1.4 Minimum shear reinforcement requirements

Even when the resistance verification does not require additional shear reinforcement, EN 1992-1-1:2004 requires a minimum amount of shear reinforcement in order to ensure a basic level of ductility and crack control after cracking. This requirement reflects the brittle nature of shear failure and aims to prevent a sudden loss of load-carrying capacity.

According to the recommended values in EN 1992-1-1:2004, the minimum shear reinforcement ratio is defined as

$$\rho_{\mathrm{w,min}} = 0{,}08\frac{\sqrt{f_{\mathrm{ck}}}}{f_{\mathrm{yk}}} \tag{3.18}$$

The corresponding minimum shear reinforcement area within the spacing s is obtained from

$$A_{\mathrm{sw,min}} = \rho_{\mathrm{w,min}}\, s\, b_{\mathrm{w}} \sin\alpha \tag{3.19}$$

where

$A_{sw,min}$ minimum area of shear reinforcement within spacing s

s spacing of the shear reinforcement

$\rho_{w,min}$ minimum shear reinforcement ratio

b_w web width of the member

α angle of the shear reinforcement relative to the longitudinal axis

f_{ck} characteristic compressive strength of concrete

f_{yk} characteristic yield strength of the shear reinforcement

For the common case of vertical stirrups, $\alpha = 90^\circ$ and thus $\sin\alpha = 1$. Equation (3.19) then simplifies to

$$A_{sw,min} = 0{,}08\, s\, b_w \frac{\sqrt{f_{ck}}}{f_{yk}} \tag{3.20}$$

It should be noted that the German National Annex may adopt an alternative formulation for the minimum shear reinforcement ratio based on f_{ctm}. However, for a consistent comparison between the recommended provisions of EN 1992-1-1:2004 and EN 1992-1-1:2023, the present thesis uses the recommended Eurocode expression given in Equation (3.18).

VGU
Vietnamese-German University

3.2 Limitations and motivation for revision

A major limitation of the EC2:2004 shear formulation is its empirical and force-based nature. In this context, this implies that the design equations are primarily calibrated against experimental results rather than derived from a single mechanically consistent model of shear transfer. Although important parameters such as effective depth d, longitudinal reinforcement ratio ρ_l, and characteristic value of concrete's compressive strength f_{ck} are included, the formulation does not explicitly relate shear resistance to the deformation state of the member or to the kinematics of inclined shear cracks. As a result, the formulation offers only limited insight into the physical mechanisms governing shear transfer [22].

For members without shear reinforcement, this limitation is particularly evident in the simplified treatment of size effect. According to the official background to the second generation of EC2, the current formulation underestimates the influence of size effect, is too conservative for members subjected to tensile axial forces, does not explicitly consider shear slenderness, and was originally derived for point-loaded simply supported beams, which are not fully representative of practical design situations [22]. These shortcomings were among the main reasons for introducing a new formulation based on the Critical Shear Crack Theory in EC2:2023 [17, 22].

For members with shear reinforcement, a further limitation is that the inclination of the concrete compression strut is treated as a design parameter within prescribed limits. While this provides "sufficient" flexibility in design, it reduces the mechanical transparency of the model. In addition, the individual shear-transfer mechanisms, such as aggregate interlock, residual tensile stresses, dowel action, and the contribution of the compression zone, are not explicitly separated in the EC2:2004 design format, although experimental and theoretical studies show that their contribution depends strongly on crack opening, crack sliding, and the development of the critical shear crack [14, 5].

Overall, the EC2:2004 approach provides a practical and widely used design format, but its empirical basis, simplified treatment of governing parameters, and limited mechanical transparency formed an important motivation for the development of more physically based provisions in the new generation of Eurocode 2 [8, 22].

3.3 The second generation of Eurocode 2 (EN 1992-1-1:2023)

As discussed in the previous section, the EC2:2004 shear provisions have several limitations, particularly their empirical-based character. In response to these limitations, the second generation of Eurocode 2 adopts a more mechanism-based approach to shear design. The revised provisions are informed by modern research and include concepts associated with the Critical Shear Crack Theory and the fib Model Code 2010 [17].

A central change in EN 1992-1-1:2023 is that the verification is formulated directly at the shear stress level rather than primarily in terms of shear force. In this context, a mechanism-based approach means that the design rules are intended to reflect the physical processes governing shear transfer, such as crack development, aggregate interlock, and the influence of member deformation. Thus, the new code does not merely modify coefficients from the previous version, but introduces a revised interpretation of shear behavior.

3.3.1 Design shear stress

The design shear stress is defined as

$$\tau_{\mathrm{Ed}} = \frac{V_{\mathrm{Ed}}}{b_{\mathrm{w}} \cdot z} \tag{3.21}$$

VGU Vietnamese-German University

where

V_{Ed} design shear force at the considered cross-section

b_{w} web width of the member as demonstrated in Figure 3.2

z internal lever arm between compression and tension resultants, approximated as $z \approx 0{,}9d$

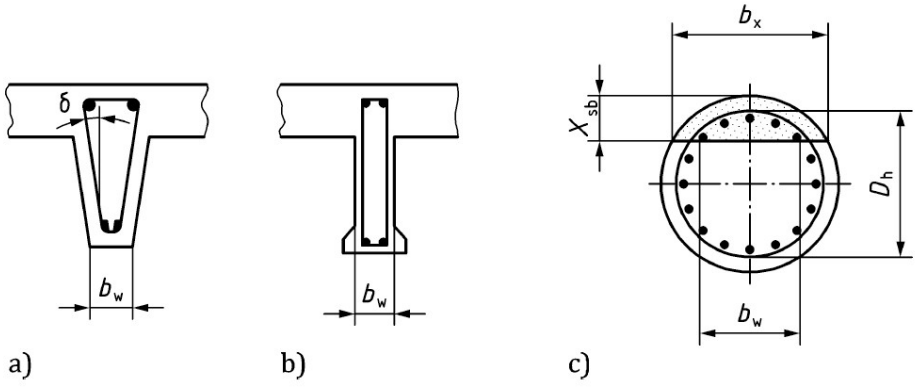

Figure 3.2: Definition of b_{w} for sections with variable width (source: EN 1992-1-1:2023, Figure 8.10)

This formulation aligns the verification more closely with the physical behavior of shear transfer. Since the individual shear-transfer mechanisms may be interpreted in terms of stresses, their combined contribution determines the overall shear resistance of the member. Compared to EC2:2004, the new approach therefore provides a more transparent mechanical interpretation, although its notation and structure may initially appear more complex.

3.3.2 Minimum shear resistance of concrete members

The concept of a lower bound for shear resistance is retained in EC2:2023. However, unlike EC2:2004, which expresses this lower bound in force form, the new code defines a minimum shear stress. The minimum shear resistance is defined as

$$\tau_{\mathrm{Rd,c,min}} = \frac{11}{\gamma_{\mathrm{v}}} \cdot \sqrt{\frac{f_{\mathrm{ck}}}{f_{\mathrm{yd}}} \cdot \frac{d_{\mathrm{dg}}}{d}} \tag{3.22}$$

where

γ_{v} partial safety factor of shear, as detailed in Figure 3.3

f_{ck} characteristic compressive strength of concrete

f_{yd} design yield strength of the flexural reinforcement

d effective depth of the member, measured from the outer edge of the member to the centroid of longitudinal tensile reinforcement

d_{dg} aggregate-dependent size parameter accounting for the influence of aggregate size on shear transfer, defined as
$16\,\mathrm{mm} + D_{\mathrm{lower}} \leq 40\,\mathrm{mm}$ for $f_{ck} \leq 60$ MPa
$16\,\mathrm{mm} + D_{\mathrm{lower}}(60/f_{ck})^2 \leq 40\,\mathrm{mm}$ for $f_{ck} > 60$ MPa

The parameter d_{dg} describes the influence of aggregate size on shear transfer and is defined as above in which D_{lower} is the lower sieve size of the coarse aggregate.

The minimum shear stress represents the residual ability of cracked concrete to transfer shear through mechanisms such as aggregate interlock, residual tensile stresses, and the formation of a stable compression zone. By defining this lower bound directly as a stress rather than as a force, the new code links the minimum resistance more clearly to the material behavior.

Design situations — Limit states	γ_S for reinforcing and prestressing steel	γ_C and γ_{CE} for concrete	γ_V for shear and punching resistance without shear reinforcement
Persistent and transient design situation	1,15	1,50[a]	1,40
Fatigue design situation	1,15	1,50	1,40
Accidental design situation	1,00	1,15	1,15
Serviceability limit state	1,00	1,00	—
NOTE The partial factors for materials correspond to geometrical deviations of Tolerance Class 1 and Execution Class 2 in EN 13670.			
[a] The value for γ_{CE} applies when the indicative value for the elastic modulus according 5.1.4(2) is used. A value $\gamma_{CE} = 1{,}3$ applies when the elastic modulus is determined according to 5.1.4(1).			

Figure 3.3: Partial safety factors for materials (source: EN 1992-1-1:2023, Table 4.3 (NDP))

3.3.3 Shear resistance of concrete members without shear reinforcement

For concrete members without shear reinforcement, EC2:2023 defines the shear resistance as

$$\tau_{Rd,c} = \frac{0{,}66}{\gamma_v} \cdot \left(100 \cdot \rho_l \cdot f_{ck} \cdot \frac{d_{dg}}{d}\right)^{1/3} \tag{3.23}$$

VGU Vietnamese-German University

where

- γ_v partial safety factor of shear
- ρ_l longitudinal tensile reinforcement ratio, defined as $\rho_l = \frac{A_{sl}}{b_w \cdot d}$
- A_{sl} effective area of tensile reinforcement situated at a distance d beyond the considered section
- b_w width of the cross-section of the member
- f_{ck} characteristic cylinder compressive strength of concrete
- d_{dg} aggregate-dependent size parameter, as defined in Equation (3.22)
- d effective depth of the member, measured from the outer edge of the member to the centroid of longitudinal tensile reinforcement

Compared to EC2:2004, this formulation expresses the resistance directly as a shear stress and introduces the influence of aggregate size more explicitly through the ratio $\frac{d_{dg}}{d}$. The shear resistance increases with increasing longitudinal reinforcement ratio and concrete strength, while the effect of member size is reflected more transparently than in the previous code. In this sense, the new formulation addresses some of the earlier criticisms related to size effect and to the limited physical interpretation of the former empirical factor.

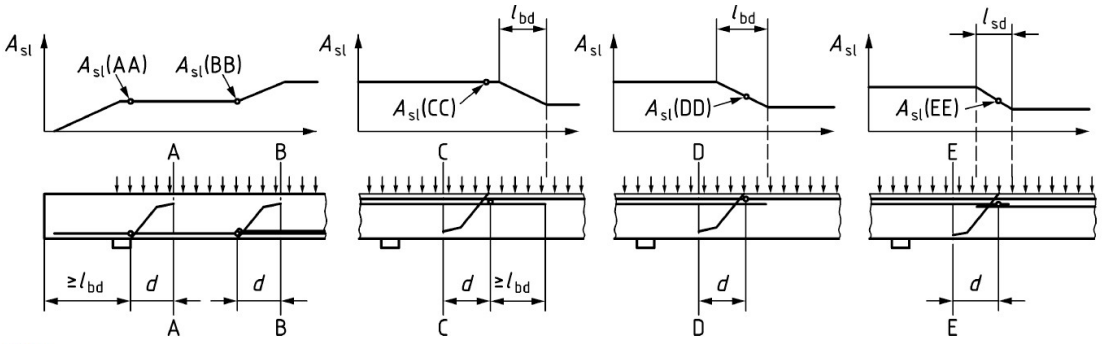

Key

Control sections A–A and C–C:	Cases where anchored and curtailed reinforcement may be fully accounted for
Control section B–B:	Case where curtailed reinforcement may not be accounted for
Control sections D-D and E–E:	Cases where curtailed or spliced reinforcement may be partially accounted for

Figure 3.4: Definition of A_{sl} in Equation (3.23) (source: EN 1992-1-1:2023, Figure 8.7)

Alternative to effective depth d

In addition, EC2:2023 allows the effective depth d to be replaced by the mechanical shear span a_v for members with an effective shear span a_{cs}. This reflects a more refined mechanical interpretation of shear transfer, since the influence of load arrangement and internal force distribution can be considered more explicitly, especially for members with short shear spans. In contrast to EC2:2004, the effect of load application is therefore represented more directly in the design model.

VGU Vietnamese-German University

$$a_v = \sqrt{\frac{a_{cs}}{4} \cdot d}$$

The effective shear span a_{cs} at the control section may be calculated as a function of the internal forces:

$$4d \geq a_{cs} = \frac{|M_{Ed}|}{|V_{Ed}|} \geq d$$

where

d effective depth of the member, measured from the outer edge of the member to the centroid of longitudinal tensile reinforcement

M_{Ed} design bending moment at the control section, including effects of prestressing

V_{Ed} design shear force at the control section, including effects of prestressing

Overall, the revised provisions for members without shear reinforcement may be regarded as a more physically grounded development of the previous code. They address several recognized shortcomings of EC2:2004, particularly with regard to the treatment of size effect and the mechanical interpretation of shear transfer. However, these improvements are accompanied

by a formulation that is less intuitive to interpret, so that the revised approach may require more careful explanation when introduced in design practice.

3.3.4 Shear resistance of concrete members with shear reinforcement

In EC2:2023, the shear design of members with shear reinforcement is formulated at the stress level. Similar to EC2:2004, the verification considers the contribution of the shear reinforcement and the capacity of the concrete compression field.

Truss model and angle θ

The angle θ represents the inclination of the concrete compression strut. It cannot be chosen freely, because a smaller angle increases the contribution of the shear reinforcement but also increases the compressive stresses in the concrete. Therefore, EC2:2023 limits the permissible range of θ.

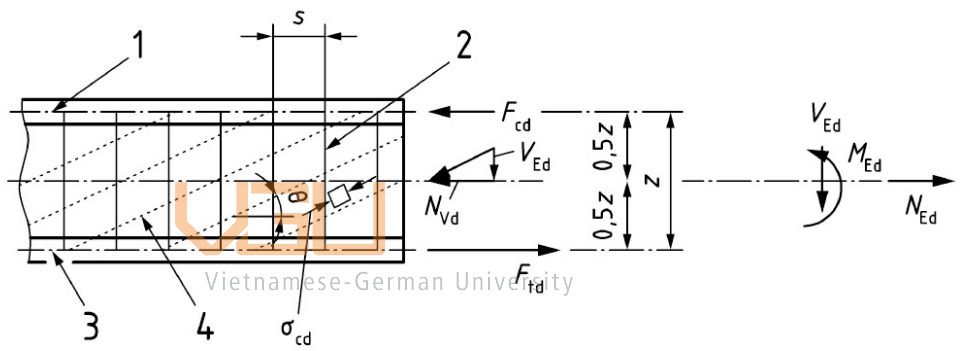

Key

1 axis of compression chord
2 shear reinforcement
3 axis of tension chord
4 struts (compression field)

Figure 3.5: Model and notation for shear reinforced members (source: EN 1992-1-1:2023, Figure 8.9)

$$1 \leq \cot\theta \leq \cot\theta_{\min} \tag{3.24}$$

The minimum strut inclination $\cot\theta_{\min}$ depends on the axial force level. For simplification, the new generation gives the following values of $\cot\theta$ as follows:

- $\cot\theta_{\min} = 2{,}5$ for members without axial load
- $\cot\theta_{\min} = 3{,}0$ for members subjected to significant axial compression (average compressive stress ≥ 3 MPa and with a compression zone depth $x < 0{,}25d$)

- $2{,}5 \leq \cot\theta_{\min} \leq 3{,}0$ may be interpolated
- $\cot\theta_{\min} = 2{,}5 - 0{,}1 \cdot \dfrac{N_{\mathrm{Ed}}}{|V_{\mathrm{Ed}}|}$ for members under axial tension

When shear reinforcement of ductility class A is used, the resulting value of $\cot\theta_{\min}$ shall be reduced by 20%.

The following limits correspond to the balanced condition in which the shear reinforcement reaches yielding while the concrete compression field simultaneously reaches its stress limit. In design terms, this condition is obtained when the shear resistance governed by the reinforcement equals that governed by the concrete compression field as shown below

$$V_{\mathrm{Rd,s}} = V_{\mathrm{Rd,max}}$$

If $V_{\mathrm{Rd,s}} < V_{\mathrm{Rd,max}}$, the shear reinforcement governs first and yields before the concrete compression field reaches its limit. Conversely, if $V_{\mathrm{Rd,max}} < V_{\mathrm{Rd,s}}$, the concrete compression field governs before the shear reinforcement is fully utilized. The value of θ given in Equation (3.26) therefore represents this balanced case. For vertical shear reinforcement, $\alpha_{\mathrm{w}} = 90^{\circ}$, and thus the general lower bound in Equation (3.25) reduces to $1 \leq \cot\theta$ as shown in Equation (3.26).

$$\tan\left(\frac{\alpha_{\mathrm{w}}}{2}\right) \leq \cot\theta \tag{3.25}$$

$$1 \leq \cot\theta = \sqrt{\frac{\nu \cdot f_{\mathrm{cd}}}{\rho_{\mathrm{w}} \cdot f_{\mathrm{ywd}}} - 1} \leq \cot\theta_{\min} \tag{3.26}$$

VGU Vietnamese-German University

Shear resistance provided by shear reinforcement

If the shear reinforcement reaches yielding, its contribution to the shear resistance may be expressed in terms of a design shear stress. The expressions for vertical and inclined shear reinforcement are given in Equation (3.27) and Equation (3.28), respectively.

For vertical shear reinforcement ($\alpha_w = 90^{\circ}$), the design shear stress carried by the reinforcement is given by

$$\tau_{\mathrm{Rd,sy}} = \rho_{\mathrm{w}} \cdot f_{\mathrm{ywd}} \cdot \cot\theta \tag{3.27}$$

$$\Rightarrow \quad a_{\mathrm{sw}} = \frac{A_{\mathrm{sw}}}{s} = \frac{\tau_{\mathrm{Ed}} \cdot b_{\mathrm{w}}}{f_{\mathrm{ywd}} \cdot \cot\theta}$$

For inclined shear reinforcement at an angle α_w to the longitudinal member axis, the corresponding expression becomes

$$\tau_{\mathrm{Rd,sy}} = \rho_{\mathrm{w}} \cdot f_{\mathrm{ywd}} \cdot (\cot\theta + \cot\alpha_{\mathrm{w}}) \cdot \sin\alpha_{\mathrm{w}} \tag{3.28}$$

$$\Rightarrow \quad a_{\mathrm{sw}} = \frac{A_{\mathrm{sw}}}{s} = \frac{\tau_{\mathrm{Ed}} \cdot b_{\mathrm{w}}}{f_{\mathrm{ywd}} \cdot (\cot\theta + \cot\alpha_{\mathrm{w}}) \cdot \sin\alpha_{\mathrm{w}}}$$

where

ρ_w shear reinforcement ratio, area of shear reinforcement per unit web area, defined as:

$$\rho_w = \frac{A_{\text{sw}}}{b_{\text{w}} \cdot s} \tag{3.29}$$

- A_{sw} cross-sectional area of shear reinforcement provided within the spacing s
- b_{w} web width of the cross-section as demonstrated in Figure 3.2
- s spacing of the shear reinforcement

f_{ywd} design yield strength of the shear reinforcement

θ angle of the concrete compression strut

α_{w} angle of the shear reinforcement with respect to the longitudinal member axis

τ_{Ed} design shear stress

$\tau_{\text{Rd,sy}}$ design shear stress resistance provided by yielding of the shear reinforcement

For sections with variable width, the value of A_{sw} in Equation (3.29) should be multiplied by $\cos \delta$, where δ is defined in Figure 3.2.

VGU Vietnamese-German University

These expressions indicate that, provided yielding of the shear reinforcement is attained, the reinforcement contribution to the shear resistance increases with increasing shear reinforcement ratio ρ_{w}, increasing design yield strength f_{ywd}, and increasing values of $\cot \theta$ within the admissible range.

Maximum shear resistance governed by the concrete compression field $\tau_{\text{Rd,max}}$

In addition to the contribution of the shear reinforcement, the concrete compression field must remain below its design stress limit. Otherwise, failure may occur by crushing of the concrete compression strut even when sufficient shear reinforcement is provided. The stress in the concrete compression field shall therefore satisfy the following condition.

For vertical shear reinforcement ($\alpha_{\text{w}} = 90^{\circ}$), the maximum stress in the concrete strut is defined as

$$\sigma_{\text{cd}} = \tau_{\text{Ed}} \left(\cot \theta + \tan \theta\right) \leq \nu \, f_{\text{cd}} \tag{3.30}$$

For inclined shear reinforcement at an angle α_{w} to the longitudinal member axis, the following equation applies

$$\sigma_{\text{cd}} = \tau_{\text{Ed}} \cdot \left(\frac{1 + \cot^2 \theta}{\cot \theta + \cot \alpha_{\text{w}}} \right) \leq \nu \cdot f_{\text{cd}} \tag{3.31}$$

where

σ_{cd} compressive stress in the concrete compression field

τ_{Ed} design shear stress

ν concrete strength reduction factor for shear: $\nu = 0{,}6(1 - f_{ck}/250)$

f_{cd} design compressive strength of concrete

θ angle of the concrete compression strut

α_w angle of the shear reinforcement with respect to the longitudinal member axis

For the balanced case in which the shear reinforcement reaches yielding simultaneously with the stress limit of the concrete compression field, the corresponding shear stress resistance for vertical shear reinforcement is obtained by combining the expressions for the reinforcement contribution and the compression field limit, which gives

$$\tau_{Rd} = \rho_w \cdot f_{ywd} \cdot \cot\theta \leq \frac{\nu \cdot f_{cd}}{2} \tag{3.32}$$

For interpretation purposes, Equation (3.30) may be rewritten using the trigonometric identity

$$\cot\theta + \tan\theta = \frac{2}{\sin(2\theta)}$$

VGU Vietnamese-German University

Substituting this identity into Equation (3.30) yields

$$\sigma_{cd} = \frac{2 \cdot \tau_{Ed}}{\sin(2\theta)} \leq \nu \cdot f_{cd} \tag{3.33}$$

At the stress limit of the concrete compression field, the maximum admissible shear stress is therefore

$$\tau_{Rd,max} = 0{,}5 \cdot \nu \cdot f_{cd} \cdot \sin(2\theta)$$

By converting shear stress to shear force using

$$V_{Rd,max} = \tau_{Rd,max} \cdot b_w \cdot z$$

and adopting the common approximation $z \approx 0{,}9 \cdot d$, the corresponding maximum shear force resistance becomes

$$V_{Rd,max} = 0{,}45 \cdot \nu \cdot b_w \cdot d \cdot f_{cd} \cdot \sin(2\theta)$$

Additional longitudinal force due to shear

Although the longitudinal reinforcement is primarily designed to resist bending moments, shear gives rise to additional tensile forces as a result of the truss action that develops after cracking. The horizontal component of the concrete compression strut must be equilibrated

by the longitudinal reinforcement, thereby increasing the tensile force that has to be carried. This effect is taken into account through the additional longitudinal force N_{Vd}. For vertical shear reinforcement, the expression is defined as

$$N_{\mathrm{Vd}} = |V_{\mathrm{Ed}}| \cdot \cot\theta \tag{3.34}$$

For inclined shear reinforcement, the expression is defined as

$$N_{\mathrm{Vd}} = |V_{\mathrm{Ed}}| \cdot (\cot\theta - \cot\alpha_{\mathrm{w}}) \tag{3.35}$$

where

N_{Vd} additional tensile force to be considered in the longitudinal reinforcement

V_{Ed} design shear force

θ angle of the concrete compression strut

α_{w} angle of the shear reinforcement with respect to the longitudinal member axis

Verification of shear resistance of concrete members with shear reinforcement

Overall, the design of members with shear reinforcement according to EN 1992-1-1:2023 requires the simultaneous verification of three conditions: the contribution of the shear reinforcement, the stress limit of the concrete compression field, and the additional tensile force in the longitudinal reinforcement. Compared with EC2:2004, the revised formulation describes the internal force transfer more explicitly, but this also leads to a more elaborate design procedure. Symbolically, the verification format may be expressed as

$$\mathrm{EC2:2004:}\quad \begin{cases} V_{\mathrm{Ed}} \le V_{\mathrm{Rd,s}} \\ V_{\mathrm{Ed}} \le V_{\mathrm{Rd,max}} \end{cases} \qquad \mathrm{EC2:2023:}\quad \begin{cases} \tau_{\mathrm{Ed}} \le \tau_{\mathrm{Rd,sy}} \\ \tau_{\mathrm{Ed}} \le \tau_{\mathrm{Rd,max}} \\ F_{\mathrm{td,total}} = F_{\mathrm{td,flex}} + N_{\mathrm{Vd}} \end{cases}$$

3.3.5 Minimum shear reinforcement requirements

EN 1992-1-1:2023 requires a minimum amount of shear reinforcement to be provided in beams requiring shear or torsion reinforcement. According to EC2:2023, Clause 12.2.(4), the required minimum shear reinforcement ratio is defined as

$$\rho_{\mathrm{w,req,min}} = 0{,}08\sqrt{\frac{f_{\mathrm{ck}}}{f_{\mathrm{yk}}}} \tag{3.36}$$

The provided shear reinforcement ratio must then satisfy

$$\rho_w = \frac{A_{\text{sw}}}{s \cdot b_{\text{w}} \cdot \sin \alpha} \geq \rho_{\text{w,req,min}} \tag{3.37}$$

where

ρ_{w}	provided shear reinforcement ratio
$\rho_{\text{w,req,min}}$	required minimum shear reinforcement ratio
A_{sw}	total cross-sectional area of shear reinforcement provided within the spacing s
s	spacing of the shear reinforcement measured along the longitudinal member axis
b_{w}	width of the web of the member
α	angle between the shear reinforcement and the longitudinal axis
f_{ck}	characteristic compressive strength of concrete
f_{yk}	characteristic yield strength of the shear reinforcement

From Equation (3.37), the corresponding minimum required shear reinforcement area within the spacing s is obtained as

VGU Vietnamese-German University

$$A_{\text{sw,min}} = \rho_{\text{w,req,min}} \cdot s \cdot b_{\text{w}} \cdot \sin \alpha \tag{3.38}$$

and by substitution of Equation (3.36),

$$A_{\text{sw,min}} = 0{,}08 \cdot s \cdot b_{\text{w}} \cdot \sin \alpha \sqrt{\frac{f_{\text{ck}}}{f_{\text{yk}}}} \tag{3.39}$$

For the common case of vertical stirrups, $\alpha = 90^\circ$ and thus $\sin \alpha = 1$. Equation (3.39) therefore simplifies to

$$A_{\text{sw,min}} = 0{,}08 \cdot s \cdot b_{\text{w}} \cdot \sqrt{\frac{f_{\text{ck}}}{f_{\text{yk}}}} \tag{3.40}$$

The value of $\rho_{\text{w,min}}$ may also be reduced as follows:

- by 10% when using ductility class B reinforcement

$$\rightarrow \rho_{\text{w,req,min}} = 0{,}9 \cdot \rho_{\text{w,min}}$$

- by 20% when using ductility class C reinforcement

$$\rightarrow \rho_{\text{w,req,min}} = 0{,}8 \cdot \rho_{\text{w,min}}$$

This requirement is intended to ensure that the shear model adopted in the code remains applicable and that the structural response is reasonably ductile.

VGU
Vietnamese-German University

4. Punching Shear

4.1 The first generation of Eurocode 2 (EN 1992-1-1:2004)

Punching shear is a brittle local failure that may occur in slabs or footings subjected to concentrated loads, such as column-slab connections. The load is transferred through a relatively small area, which gives rise to high shear stresses in the surrounding slab region. If these stresses exceed the resistance of a concrete member, shear cracks will develop in the slab as shown in Figure 2.6.

Given the sudden nature of punching failure, it is important to define the control perimeters properly in punching shear verification, where this phenomenon might occur. Defining a control perimeter allows the average shear stress to be determined, thus the corresponding resistance can be estimated. The first generation of Eurocode 2 provides parameters and coefficients derived from empirical research. The purpose of this section is to present key parameters and verification rules of EC2:2004, which will serve as a basis for later comparison with EC2:2023.

VGU
Vietnamese-German University

4.1.1 Relevant parameters

Design shear stress v_{Ed}

The average shear stress acting on a control perimeter is defined as

$$v_{Ed} = \beta \frac{V_{Ed}}{u_i \cdot d_{eff}} \tag{4.1}$$

where

- β the eccentricity factor accounting for the distribution of shear stresses due to moment
- V_{Ed} the applied shear force
- u_i the investigated control perimeter
- d_{eff} the effective depth of the considered slab or footing

For a given force, the average shear stress decreases if the load can be distributed over a larger surrounding area, which is the product of control perimeter and the effective depth of the considered member. Furthermore, uneven stress concentrations caused by eccentric loading or moment transfer, which is common in practice, are considered through the factor

β. This factor amplifies the stress to reflect non-uniform shear distribution in column-slab connection.

Effective depth d_{eff}

The effective depth of a slab or footing d_{eff} may be calculated as

$$d_{\text{eff}} = \frac{d_y + d_z}{2} \tag{4.2}$$

where d_y and d_z are the effective depths of the reinforcement in two orthogonal directions.

Control perimeter u_1

According to EC2:2004, the critical control perimeter u_1 used for punching shear verification is located at a distance of $2d$ from the column face. This control perimeter represents the section along which the applied punching shear is checked. Its shape follows the geometry of the loaded area or support region. For supports near slab edges or corners, the control perimeter is correspondingly reduced, while nearby openings may further modify the effective perimeter. Figure 4.1 illustrates the control perimeter u_1 for typical support geometries and shows how openings in the vicinity of $6d$ measured from the column face affect its shape.

VGU
Vietnamese-German University

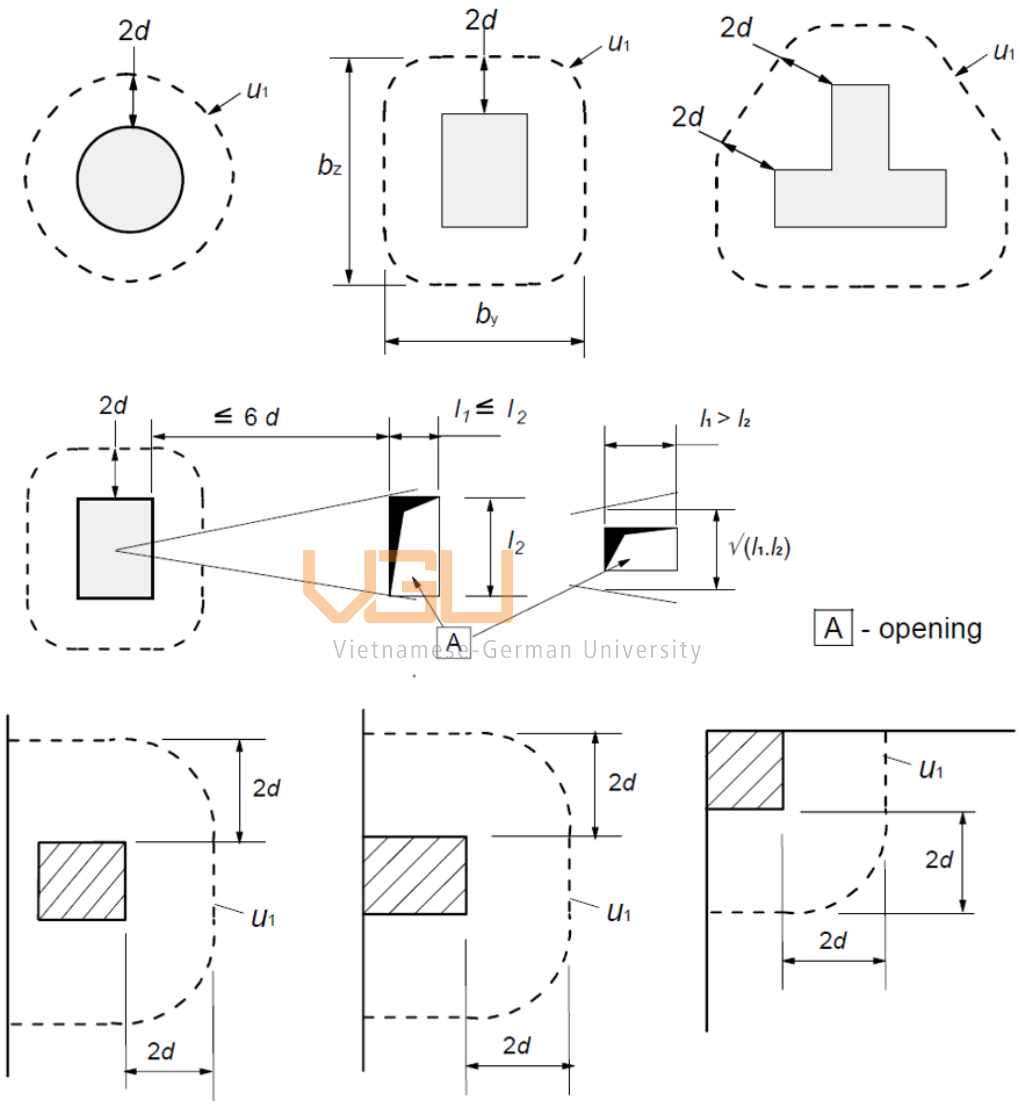

Figure 4.1: Control perimeters u_1 for typical support geometries and influence of nearby openings (source: EN 1992-1-1:2004, Figure 6.13, 6.14, and 6.15)

Coefficient β

In EC2:2004, the factor β accounts for the fact that shear stresses along the control perimeter are generally not uniformly distributed. This non-uniformity reflects real structural behavior and becomes especially important when an unbalanced moment is transferred between the slab and the column in addition to the applied force. The standard specifies two methods for determining this factor β: a detailed calculation or the use of simplified values with typical support cases. For internal, edge, and corner columns, simplified values of β may be used under the specified conditions written in EC2:2004, detailed in Figure 4.2. These simplified values apply when columns do not contribute to frame action for structural stability and adjacent spans differ by no more than 25%. As expected, the highest value of β is in corner columns, reflecting the unfavorable stress distribution associated with asymmetric geometry of the considered area and more pronounced moment transfer influence.

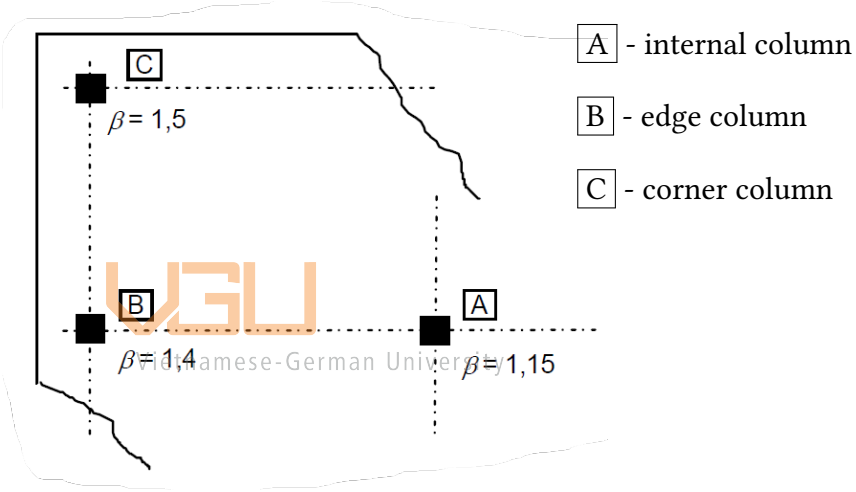

Figure 4.2: Recommended values for β (source: EN 1992-1-1:2004, Figure 6.21N)

In general, coefficient β can be determined through a detailed calculation in accordance with Equation (4.3).

$$\beta = 1 + k \frac{M_{Ed}}{V_{Ed}} \cdot \frac{u_1}{W_1} \tag{4.3}$$

where

- k a coefficient dependent on the ratio of the column dimensions c_1 and c_2 as illustrated in Figure 4.3
- M_{Ed} the design moment
- V_{Ed} the design force
- u_1 the length of the basic control perimeter
- W_1 corresponds to a distribution of shear as illustrated in Figure 4.3 and is a function of the basic control perimeter u_1

The geometric parameter W_i is defined as

$$W_{\mathrm{i}} = \int_0^{u_{\mathrm{i}}} |e| \; dl \tag{4.4}$$

where W_{i} is obtained by integrating the distance e along the considered control perimeter u_{i}. In the definition of W_{i}, e denotes the local distance of a perimeter element dl from the axis about which the moment M_{Ed} acts. For a rectangular column, W_1 may be written as

$$W_1 = \frac{c_1^2}{2} + c_1 c_2 + 4 c_2 d + 16 d^2 + 2\pi d c_1 \tag{4.5}$$

where c_1 is the column dimension parallel to the eccentricity of the load and c_2 is the column dimension perpendicular to the eccentricity of the load (Figure 4.3)

c_1/c_2	$\leq 0{,}5$	1,0	2,0	$\geq 3{,}0$
k	0,45	0,60	0,70	0,80

Table 4.1: Values of k (source: EN 1992-1-1:2004, Table 6.1)

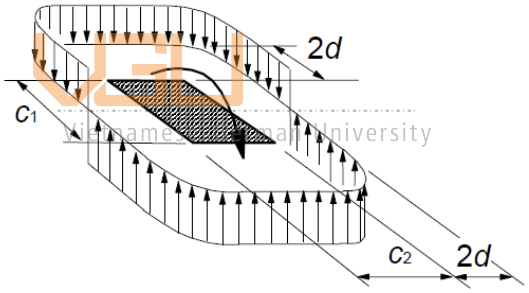

Figure 4.3: Shear distribution due to an unbalanced moment at a slab-internal column connection (source: EN 1992-1-1:2004, Figure 6.19)

Outer control perimeter u_{out} and $u_{\mathrm{out,ef}}$

The outer control perimeter at which punching shear reinforcement is no longer required is denoted by u_{out}, or, in the effective form, by $u_{\mathrm{out,ef}}$. It is determined from Equation (4.6) and defines the extent of the zone in which punching shear reinforcement must be provided. Beyond this perimeter, the slab may be verified without additional punching shear reinforcement.

$$u_{\mathrm{out}} = \beta \frac{V_{\mathrm{Ed}}}{v_{\mathrm{Rd,c}} \cdot d} \tag{4.6}$$

Equation (4.6) indicates that the outer control perimeter increases with the applied shear force and the load concentration factor β, and decreases with increasing concrete punching shear

resistance $v_{\mathrm{Rd,c}}$ and effective depth d. For the outermost perimeter of punching shear reinforcement, EC2:2004 recommends $k = 1{,}5$, meaning that the outermost reinforcement perimeter should be placed at a distance not greater than $1{,}5d$ within u_{out} or $u_{\mathrm{out,ef}}$ as shown in Figure 4.4.

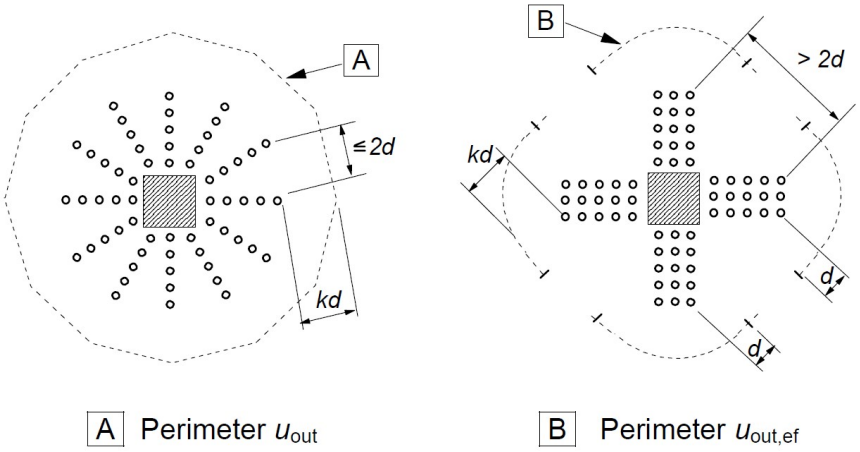

Figure 4.4: Outer control perimeters u_{out} and $u_{\mathrm{out,ef}}$ (source: EN 1992-1-1:2004, Figure 6.22)

Overall, the EC2:2004 formulation is based on a control perimeter at a distance of $2d$ measured from the column face, combined with empirical coefficients β to account for eccentricity and geometry of supports. However, its physical relation remains limited and sometimes overconservative. These aspects form an important basis for understanding the changes introduced in EC2:2023.

VGU
Vietnamese-German University

4.1.2 Punching shear resistance of slabs and column bases without shear reinforcement

For slabs and column bases without shear reinforcement, the punching shear resistance is governed by the concrete capacity along the basic control perimeter u_1. According to EC2:2004, the design punching shear resistance may be expressed as

$$v_{\mathrm{Rd,c}} = \frac{0{,}18}{\gamma_{\mathrm{v}}} \cdot k \left(100 \cdot \rho_{\mathrm{l}} \cdot f_{\mathrm{ck}}\right)^{1/3} + k_1 \cdot \sigma_{\mathrm{cp}} \geq \left(v_{\mathrm{min}} + k_1 \cdot \sigma_{\mathrm{cp}}\right) \tag{4.7}$$

Since the minimum shear resistance of a concrete member was introduced in the shear section, v_{min} may be taken from Equation (3.2).

The factor k accounts for the size effect, reflecting the reduction in shear strength of a concrete member with increasing member depth. It is determined from the effective depth d_{eff}, expressed in mm, as

$$k = 1 + \sqrt{\frac{200}{d_{\mathrm{eff}}}} \leq 2{,}0 \tag{4.8}$$

The longitudinal reinforcement ratio ρ_{l} represents the influence of flexural reinforcement on punching resistance of a concrete member. The average reinforcement ratio is calculated as the mean of the reinforcement ratios in the two orthogonal directions y and z:

VGU Vietnamese-German University

$$\rho_{\mathrm{l}} = \sqrt{\rho_{\mathrm{ly}} \cdot \rho_{\mathrm{lz}}} \leq 0{,}02 \tag{4.9}$$

where ρ_{ly} and ρ_{lz} are determined as average values over an effective slab's or footing's width, which is equal to the column width plus $3d$ on each side of the column. In this way, the formulation considers the longitudinal reinforcement that is effective in the vicinity of the support region, where punching failure is critical.

If longitudinal compressive forces act in the slab or footing, their favorable influence of enhancing concrete capacity is taken into account through the average compressive stress σ_{cp}, defined as

$$\sigma_{\mathrm{cp}} = \frac{\sigma_{\mathrm{c,y}} + \sigma_{\mathrm{c,z}}}{2} \tag{4.10}$$

with the individual stress components are given by

$$\sigma_{\mathrm{c,y}} = \frac{N_{\mathrm{Ed,y}}}{A_{\mathrm{c,y}}}, \quad \sigma_{\mathrm{c,z}} = \frac{N_{\mathrm{Ed,z}}}{A_{\mathrm{c,z}}} \tag{4.11}$$

The coefficient k_1 limits the influence of average compressive stress on the punching shear resistance. In EC2:2004, the recommended value is $k_1 = 0{,}1$.

The formulation of EC2:2004 incorporates the main parameters known to influence punching resistance, such as member depth, reinforcement ratio, concrete strength, and average compression. Nevertheless, the closed-form expression remains essentially empirical. In par-

ticular, the size effect is represented through a simplified factor, while the role of slab deformation and the development of the critical shear crack are not described explicitly. This limitation was one of the main motivations for the revised formulation in EC2:2023.

VGU
Vietnamese-German University

4.1.3 Punching shear resistance of slabs and column bases with shear reinforcement

If the design shear stress at the considered control perimeter u_1 exceeds the concrete punching shear resistance $v_{Rd,c}$ but remains below the maximum punching shear resistance $v_{Rd,max}$, shear reinforcement shall be provided. With shear reinforcement, the punching shear resistance may be determined using the following Equation (4.12).

$$v_{Rd,cs} = 0{,}75 \cdot v_{Rd,c} + 1{,}5 \left(\frac{d_{eff}}{s_r}\right) A_{sw} \cdot f_{ywd,eff} \cdot \left(\frac{1}{u_1 \cdot d_{eff}}\right) \cdot \sin \alpha \tag{4.12}$$

where

$v_{Rd,cs}$ the design punching shear resistance at the control perimeter when shear reinforcement is provided

$v_{Rd,c}$ the design punching shear resistance of a concrete member without shear reinforcement

d_{eff} the effective depth of the considered slab or footing

s_r the spacing in the radial direction, defined as the distance between successive perimeters of shear reinforcement

VGU Vietnamese-German University

A_{sw} the cross-sectional area of one perimeter of punching shear reinforcement around the column

$f_{ywd,eff}$ the effective design yield strength of the shear reinforcement, limited by the slab (or footing) effective depth: $f_{ywd,eff} = 250 + 0{,}25\, d_{eff} \leq f_{ywd}$

u_1 the control perimeter at which punching shear is verified

f_{ywd} the design yield strength of the shear reinforcement

α the angle between the shear reinforcement and the plane of the slab ($\alpha = 90^\circ$ for vertical shear reinforcement)

This expression consists of two parts: a reduced concrete contribution, represented by $0{,}75\, v_{Rd,c}$, and an additional contribution provided by the punching shear reinforcement. Hence, the resistance depends not only on the concrete capacity of the member, but also on the amount, arrangement, and effective strength of the shear reinforcement.

4.1.4 Maximum punching shear resistance

In addition to the verification at the control perimeter u_1, EC2:2004 limits the punching shear resistance adjacent to the column by a maximum value $v_{\mathrm{Rd,max}}$. According to EC2:2004, maximum allowable punching shear resistance may be defined as

$$v_{\mathrm{Ed}} = \beta \frac{V_{\mathrm{Ed}}}{u_0 \cdot d} \leq v_{\mathrm{Rd,max}} = 0{,}5 \cdot \nu \cdot f_{\mathrm{cd}} \tag{4.13}$$

where

- β the coefficient accounting for the concentrations of shear forces
- V_{Ed} the design punching shear stress
- u_0 the loaded perimeter at the column face depending on the support conditions as shown in Table 4.2
- d effective depth of the member, measured from the compression face to the centroid of the tension reinforcement in the considered direction
- ν the reduction factor for concrete strength as given by EC2:2004: $\nu = 0{,}6\left(1 - \frac{f_{\mathrm{ck}}}{250}\right)$
- f_{cd} the design compressive concrete strength

VGU Vietnamese-German University

Table 4.2: Definition of the loaded perimeter u_0 according to EC2:2004

Support condition	**Loaded perimeter u_0**
Interior column	u_0 = length of column perimeter
Edge column	$u_0 = c_2 + 3d \leq c_2 + 2c_1$
Corner column	$u_0 = 3d \leq c_1 + c_2$

In Table 4.2, c_1 and c_2 are the column dimensions. The perimeter u_0 is the loaded perimeter at the column face and is used for the verification of the maximum punching shear resistance due to high local punching stress, whereas u_1 is the basic control perimeter located at a distance of $2d$ from the column face and is used for the ordinary punching shear verification.

In summary, EC2:2004 distinguishes between the ordinary punching verification at the control perimeter u_1 and the maximum punching shear verification at the loaded perimeter u_0. This provides a practical design framework, but the local stress checking remains closely tied to the empirical structure of the code. The revised EC2:2023 approach modifies this and relates the maximum punching resistance more explicitly to the reinforcement system and the stress-based punching model.

4.2 Limitations and motivation for revision

The punching shear formulations in EC2:2004 have been widely criticized in both research and practice, which led to a major revision in the second generation of Eurocode 2 ([17]). According to Muttoni et al., the main concerns were about both the scientific foundation of the rules and how practical they are for design work.

One of the main limitations is how the code handles the size effect. While EC2:2004 includes a size-effect factor, it is based on a simplified empirical expression derived from a limited set of test data, making its applicability outside this range uncertain. As a result, the model may not accurately capture the reduction in punching resistance for thick or heavily loaded members. Experimental evidence indicates that strength decreases more significantly with increasing slab thickness than predicted by the code, which might lead to unconservative results ([17], [10]).

In addition to that, using a fixed control perimeter 2d from the face of the column does not reflect how failure actually occurs, since actual failure involves inclined cracks forming around the column ([18]). The fixed perimeter does not change with loading, reinforcement, or slab shape, which makes the model less realistic. This adds to the lack of clarity, as it is not clear how the calculated resistance relates to what happens in reality.

These limitations are addressed in the second generation of Eurocode 2. The new approach relates punching resistance more directly to the slab's deformation behavior, particularly through the development of critical shear cracks ([18]). This allows the size effect and the influence of reinforcement to be represented more consistently. While certain simplifications remain, the revised formulation provides a more transparent and mechanically grounded description of punching shear behavior.

4.3 The second generation of Eurocode 2 (EN 1992-1-1:2023)

This section outlines the main revised punching shear provisions in EC2:2023. In contrast to the mainly empirical approach of the previous generation, the new formulation is more closely related to the punching behavior of slabs and has been modified largely on the basis of the design model adopted in EC2:2023 ([17]).

The most important changes concern the location of the control perimeter, the revised treatment of eccentricity effects, the modified expression for punching resistance without and with shear reinforcement. These changes are presented below and compared with the corresponding provisions of EC2:2004.

4.3.1 Relevant parameters

Design shear stress τ_{Ed}

According to EC2:2023, the design shear stress for punching shear verification may be calculated as

$$\tau_{Ed} = \beta_e \frac{V_{Ed}}{b_{0,5} \cdot d_v} \tag{4.14}$$

where

VGU
Vietnamese-German University

β_e the coefficient accounting for the concentrations of shear forces

V_{Ed} the applied design shear force

$b_{0,5}$ the control perimeter measured at a distance $0{,}5d_v$ from the column face

d_v shear-resisting effective depth of a slab or column base

Shear-resisting effective depth d_v

EC2:2023 revises the definition of the shear-resisting effective depth d_v by accounting for the penetration depth of the column into the slab. This represents a clear distinction from the effective depth d_{eff} used in EC2:2004. To avoid confusion with the general effective depth used in other verifications, EC2:2023 introduces the term *shear-resisting effective depth* instead of *effective depth*. This change improves terminology consistency and interpretation in punching shear design. Furthermore, the new generation adopts a different notation for the slab directions, using coordinate system x and y instead of y and z as in EC2:2004. The shear-resisting effective depth is defined as:

$$d_v = \frac{d_{v,x} + d_{v,y}}{2} \tag{4.15}$$

where d_{vx} and d_{vy} are the effective depths in the two orthogonal directions x and y.

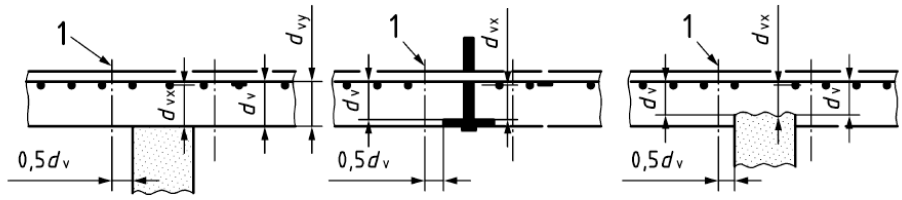

a) direct support b) hanging support with penetration c) penetration by direct support

Key

1 control perimeter

Figure 4.5: Shear-resisting effective depth of the slab d_v considering the penetration of supports (source: EN 1992-1-1:2023, Figure 8.17)

Control perimeter $b_{0,5}$

Compared with EC2:2004, the critical control perimeter is defined at a distance of $0{,}5d_v$ from the column face, instead of the perimeter u_1 located at $2d$. The new generation also provides illustrations for typical supporting members, as shown in Figure 4.6.

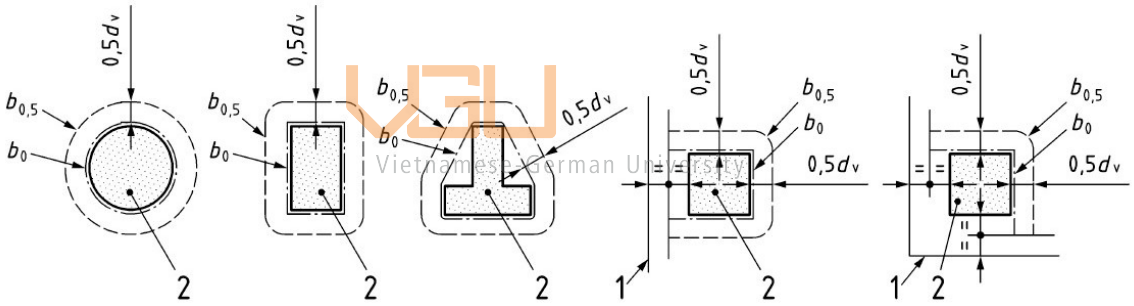

1 - slab edge 2 - area of the support

Figure 4.6: Control perimeters $b_{0,5}$ and b_0 (source: EN 1992-1-1:2023, Figure 8.19)

When punching shear occurs around large supports, the shear forces can be higher at the corners. To account for this stress concentration effect, EC2:2023 allows users to reduce the control perimeter in certain areas as illustrated in Figure 4.7 so that the design stays safe and realistic. The following points apply:

- The length of straight parts of the reduced control perimeter shall not be longer than $3d_v$ for each edge. This requirement also applies to edge and corner columns with overhangs, as illustrated in Figure 4.6.

- For large columns, only the reduced control perimeter according to Figure 4.7 needs to be considered. If a column length is wider than $6d_v$, the column may be treated like a wall end or wall corner.

- For wall ends and wall corners, the area within the control perimeter $b_{0,5}$ should be

checked for punching shear, while the area outside the control perimeter $b_{0,5}$ should be checked for shear.

- If the distance between the nearest face of an opening and the control perimeter $b_{0,5}$ exceeds $5d_v$, the influence of the opening may be neglected. In EC2:2004, this limiting distance was defined as $6d_{eff}$ (see Figure 4.1).

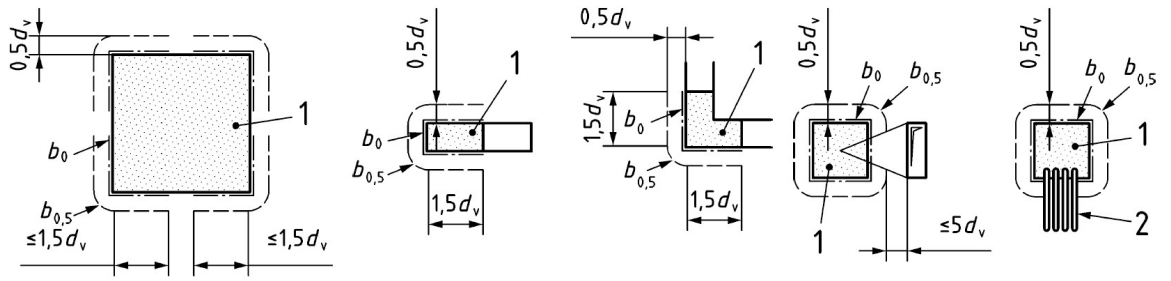

a) around large supporting areas b) around wall end c) around wall corner d) near opening e) with inserts

Key

1 supporting area

2 inserts

Figure 4.7: Reduced control perimeters $b_{0,5}$ and b_0 (source: EN 1992-1-1:2023, Figure 8.18)

If different depths exist within the same member, additional control perimeters with their corresponding shear-resisting effective depth d_v and control perimeter $b_{0,5}$ both should be verified. The case is illustrated in Figure 4.8.

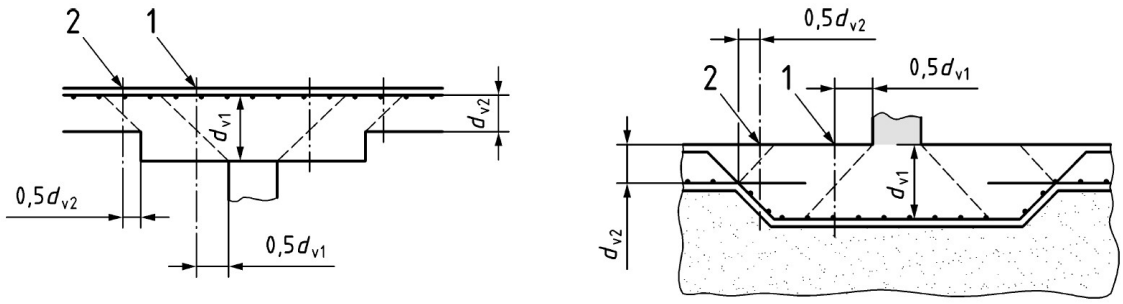

a) flat slabs b) ground slabs

Key

1 control perimeter 1

2 control perimeter 2

Figure 4.8: Control perimeters and shear-resisting effective depth d_v in members with variable depth (source: EN 1992-1-1:2023, Figure 8.20)

Compared with EC2:2004, the critical control perimeter is no longer taken at a distance of $2d$ from the column face, but at $0{,}5d_v$. This is one of the most important conceptual changes

in the new generation, because it moves the verification closer to the support region where the punching action is concentrated. Furthermore, EC2:2023 provides more explicit geometric rules for large supports, wall ends, wall corners, inserts, and nearby openings, thus extending the range of cases covered directly by the code.

Coefficient β_e

EC2:2023 introduces a revised definition of the eccentricity coefficient β_e, which accounts for load eccentricity at the control perimeter. For slab-column connections, the simplified coefficients used in EC2:2004 are retained, namely $\beta = 1{,}15$ for internal columns, $\beta = 1{,}4$ for edge columns, and $\beta = 1{,}5$ for corner columns. In addition, EC2:2023 specifies simplified β_e values for wall supports, with $\beta_e = 1{,}4$ for wall ends and $\beta_e = 1{,}2$ for wall corners.

These coefficients extend the range of support conditions explicitly covered by the code, since wall supports were not directly included in EC2:2004. Comparable values had already been given in the German National Annex, where $\beta = 1{,}35$ was recommended for wall ends and $\beta = 1{,}20$ for wall corners. The inclusion of explicit β_e values for wall supports in EC2:2023 therefore provides a clearer basis for the treatment of these cases.

Support	**Approximated**	**Refined**[a]	
internal columns	$\beta_e = 1{,}15$	$\beta_e = 1 + 1{,}1\frac{e_b}{b_b} \geq 1{,}05$	where $e_b = \sqrt{e_{b,x}^2 + e_{b,y}^2}$
edge columns	$\beta_e = 1{,}4$		where $e_b = 0{,}5\lvert e_{b,x}\rvert + \lvert e_{b,y}\rvert$
corner columns	$\beta_e = 1{,}5$		where $e_b = 0{,}27(\lvert e_{b,x}\rvert + \lvert e_{b,y}\rvert)$
ends of walls	$\beta_e = 1{,}4$		
corners of walls	$\beta_e = 1{,}2$		

[a] $e_{b,x}$, $e_{b,y}$ are the eccentricities of the line of action of the support forces with respect to the centroid of the control perimeter. The line of action of the support forces should be determined accounting for the axial force and the moments in the two directions transferred by the slab to the support (including the internal forces in a column above the slab if present). The control perimeter for calculating its centroid may be simplified replacing parts of circles by corners (see Figure 8.21 a)) and where the straight segments are not limited to $3d_v$ according to (3);

b_b is the geometric mean of the minimum and maximum overall widths of the control perimeter (see Figure 8.21 b). Where the length of straight segments of the control perimeter are limited to $3d_v$ according to (3), the overall width of the control perimeter should not be reduced):

$b_b = \sqrt{b_{b,min} \cdot b_{b,max}}$

Figure 4.9: Coefficients β_e accounting for the concentration of shear forces (source: EN 1992-1-1:2023, Table 8.3)

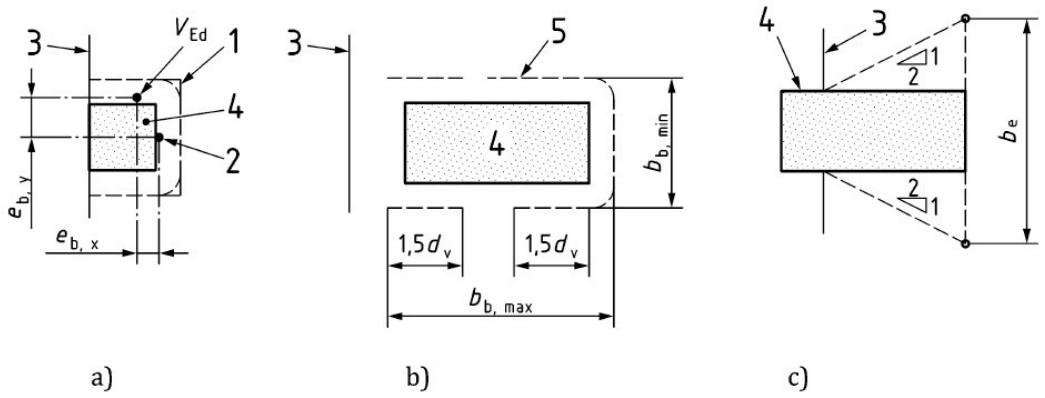

a) definition of eccentricities $e_{b,x}$ and $e_{b,y}$
b) definition of overall widths of $b_{b,min}$ and $b_{b,max}$ for control perimeter $b_{0,5}$
c) definition of width b_e for an edge column

Key

V_{Ed}	resultant of support force
1	simplification of the control perimeter with corners instead of parts of circles for calculating its centroid
2	centroid of full control perimeter
3	slab edge
4	column
5	control perimeter

VGU Vietnamese-German University

Figure 4.10: Eccentricity and geometric mean of the control perimeter for edge columns (source: EN 1992-1-1:2023, Figure 8.21)

The refined punching shear provisions in EC2:2004 and EC2:2023 are based on the same basic idea: if the support reaction acts eccentrically, the shear stress is no longer uniformly distributed along the control perimeter. As a result, the design shear is increased by an eccentricity coefficient. In EC2:2004, this effect is taken into account by the detailed calculation, defined in Equation (4.3):

$$\beta = 1 + k \cdot \frac{M_{Ed}}{V_{Ed}} \cdot \frac{u_1}{W_1}$$

In EC2:2023, the same physical effect is expressed in a more direct form, also being defined in Figure 4.9 and Figure 4.10:

$$\beta_e = 1 + 1{,}1 \cdot \frac{e_b}{b_b} \geq 1{,}05 \tag{4.16}$$

where

e_b the eccentricity of the resultant support force with respect to the centroid of the control perimeter

b_b a characteristic width of the control perimeter

EC2:2023 does not introduce a different concept, but rather reformulates the eccentricity effect

in a more compact and more direct manner. Compared with EC2:2004, the new formulation is easier to apply and is extended to support cases such as wall ends and wall corners, which were not covered explicitly in the same way before.

Outer control perimeter at which shear reinforcement is not required $b_{0,5,out}$

The outer control perimeter $b_{0,5,out}$ defines the location beyond which punching shear reinforcement is no longer required. It may be calculated as

$$b_{0,5,out} = b_{0,5} \left(\frac{d_v}{d_{v,out}} \cdot \frac{1}{\eta_c} \right)^2 \tag{4.17}$$

where

$b_{0,5}$ basic control perimeter located at a distance $0{,}5d_v$ from the face of the supporting area

d_v shear-resisting effective depth of a slab or column base

$d_{v,out}$ shear-resisting effective depth outside the second reinforced perimeter

η_c $= \tau_{Rd,c}/\tau_{Ed}$

VGU Vietnamese-German University

Equation (4.17) gives the perimeter at which the slab can resist punching shear without additional shear reinforcement. If $d_{v,out} < d_v$, the value of $b_{0,5,out}$ becomes larger. The same applies when η_c is smaller.

The gap between $b_{0,5,out}$ and the outermost perimeter should not be larger than $0{,}5d_{v,out}$ as illustrated in Figure 4.11 which shows the definition of the relevant control perimeters for different reinforcement layouts and support geometries. This ensures that the transition from the reinforced zone to the unreinforced zone is properly covered and that the load transfer does not rely on concrete alone.

Shear-resisting effective depth outside the second reinforced perimeter $d_{v,out}$

The shear-resisting effective depth outside the second reinforced perimeter is defined as

$$d_{v,out} = \frac{d_x + d_y}{2} - c_v \tag{4.18}$$

where the notation d_x and d_y is retained directly from EC2:2023. In the present context, these quantities denote the effective depths in the two orthogonal directions. For consistency with the shear-resisting effective depth d_v, they may be understood as d_{vx} and d_{vy}, although the original Eurocode notation is kept unchanged here.

The reference to the second perimeter is not arbitrary. This likely follows the minimum detailing rule that punching shear reinforcement should be arranged in at least two perimeters

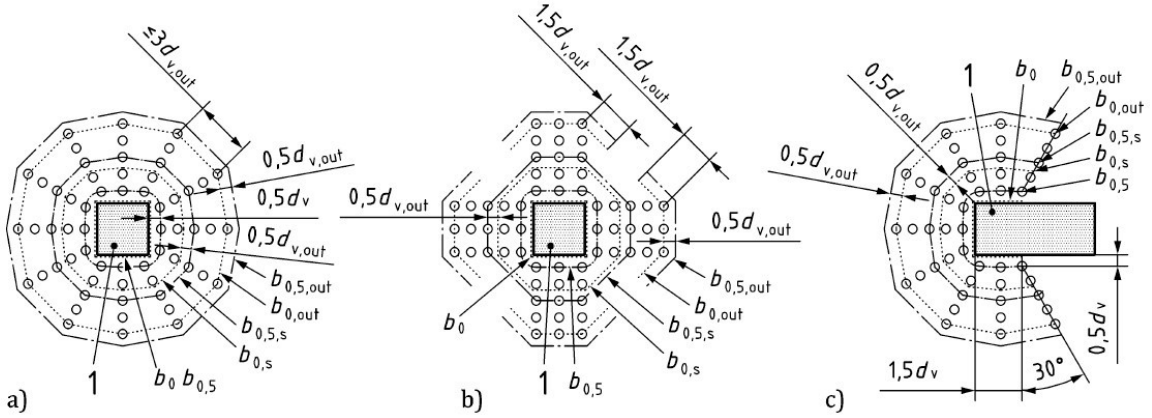

a) control perimeters for radial arrangements ($b_{0,5,s}$ and $b_{0,s}$ refer to the instance of the 3rd perimeter of shear reinforcement)

b) control perimeters for cruciform arrangements

c) control perimeters for wall ends, wall corners, large and elongated columns (instance of wall end with radial arrangement of shear reinforcement)

Key

1 supporting area

Figure 4.11: Control perimeters for punching shear reinforcement (source: EN 1992-1-1:2023, Figure 8.24)

(EN 1992-1-1:2004, Clause 9.4.3(1) and EN1992-1-1:2023, Clause 12.5.1(2)). The second perimeter therefore may be interpreted as the outer boundary of the minimum reinforced zone and the check beyond it corresponds to the behavior of the slab outside that zone.

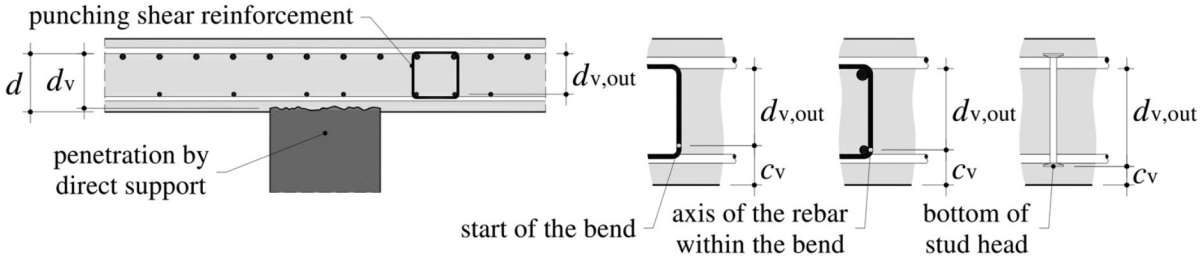

Figure 4.12: Definition of the effective depths in the punching shear analysis (Source: [11])

It should be noted that c_v in Equation (4.18) does not represent the concrete cover. Instead, c_v is an offset defined by the geometry of the punching shear reinforcement system used in the slab. Depending on the reinforcement type, this offset is measured with reference to the start of the bend, the axis of the bar within the bend, or the bottom of the stud head. Therefore, the reduction by c_v reflects that the shear-resisting effective depth d_v is not fully available outside the second reinforced perimeter.

Figure 4.13 is adapted from EC2:2023, illustrating the parameter c_v for different anchorage types. Figure 4.12 presents the same idea in a more explicit form and may help to better

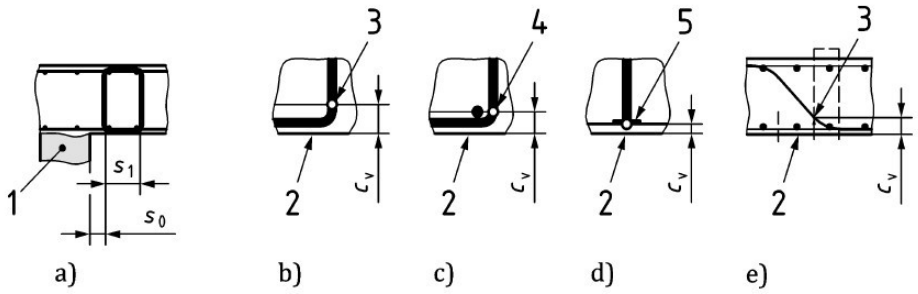

a) definition of radial spacings of punching reinforcement

b) – e) definition of parameter c_v for different anchorage types

Key

1	supporting area (column, wall end or wall corner)
2	limit of bend
3	level of axis of reinforcement inside the bend
4	bottom of stud head

Note: The source figure shows label 5, but no corresponding definition is given in the original key.

Figure 4.13: Shear-resisting effective depth outside the second reinforced perimeter $d_{v,out}$ (source: EN 1992-1-1:2023, Figure 8.23).

visualize the meaning of $d_{v,out}$ and c_v.

EC2:2023 introduces several revised parameters for punching shear verification. Compared with EC2:2004, the changes concern not only the notation, but also the geometric basis of the design model. In particular, the control perimeter $b_{0,5}$ is now located at a distance of $0{,}5d$v from the support face, the shear-resisting effective depth d_v is defined more explicitly, and the concentration of shear forces is treated through the coefficient β_e. In summary, these changes show that EC2:2023 does not simply modify isolated coefficients, but reorganizes the punching shear verification on a different mechanical basis. The revised parameters are intended to represent the actual support geometry and the stress distribution around the column more directly than in EC2:2004, but still be applicable in design practice.

4.3.2 Punching shear resistance of slabs without shear reinforcement

Compared with EC2:2004, the punching shear resistance without shear reinforcement is reformulated in EC2:2023 on a more mechanical basis. The verification is now performed at the control perimeter $b_{0,5}$ located at $0{,}5d_v$ from the support face as well as includes additional parameters such as the effective flexural reinforcement zone, the influence of refined slab depth, and aggregate-related roughness.

The design punching shear stress resistance of a concrete slab without shear reinforcement at the control perimeter is determined using the following equation:

$$\tau_{Rd,c} = \frac{0{,}6}{\gamma_v} \cdot k_{pb} \left(100 \cdot \rho_l \cdot f_{ck} \cdot \frac{d_{dg}}{d_v} \right)^{1/3} \leq \frac{0{,}5}{\gamma_v} \cdot \sqrt{f_{ck}} \tag{4.19}$$

The resistance is limited by an upper bound that depends on the characteristic compressive strength of concrete and the partial safety factor for shear. In contrast to EC2:2004, the new formulation does not rely on the former size-effect factor k alone, but combines the coefficient k_{pb} with the term (d_{dg}/d_v), making these parameters more explicit.

The parameters $\rho_{l,x}$ and $\rho_{l,y}$ are the average reinforcement ratios of bonded flexural reinforcement in the x- and y-directions. These values are determined over the effective width b_s, as illustrated in Figure 4.14. In this way, EC2:2023 defines more explicitly the slab region over which flexural reinforcement contributes to punching shear resistance of a concrete slab. Reinforcement that does not extend sufficiently beyond the control perimeter $b_{0,5}$ or beyond the line of contra-flexure is not considered, since it cannot be assumed to participate effectively in controlling crack development near the support. Here, 'sufficiently' means $2{,}5d_v + 20\phi$ beyond the control perimeter $b_{0,5}$ or 20ϕ beyond the line of contra-flexure.

$$\rho_l = \sqrt{\rho_{l,x} \cdot \rho_{l,y}} \tag{4.20}$$

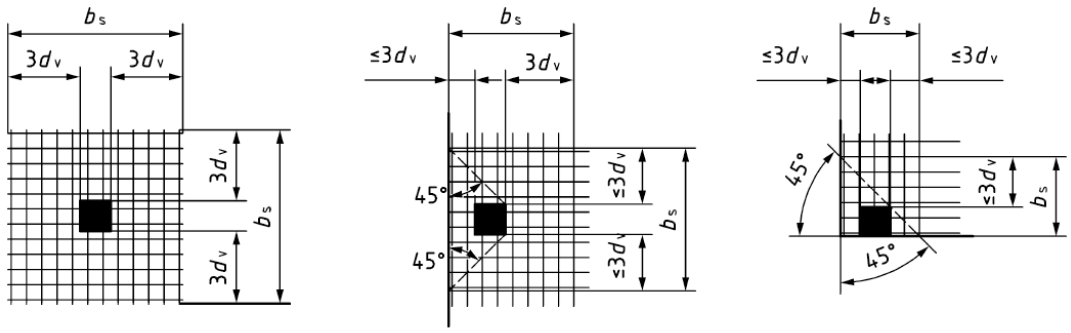

a) internal columns b) edge columns c) corner columns

Figure 4.14: Definition of width b_s (source: EN 1992-1-1:2023, Figure 8.22)

The coefficient k_{pb} is the punching shear gradient enhancement coefficient, which can be

calculated as

$$1{,}0 \leq k_{\mathrm{pb}} = 3{,}6\sqrt{1 - \frac{b_0}{b_{0,5}}} \leq 2{,}5 \tag{4.21}$$

where

b_0 the perimeter of the support illustrated in Figure 4.6 and Figure 4.7

$b_{0,5}$ the control perimeter

As defined earlier, d_{v} is the shear-resisting effective depth while the factor d_{dg} accounts for the influence of the maximum aggregate size used in the concrete mix. In general, the formulation reflects a stronger link between punching resistance and the slab's flexural behavior, as the effectiveness of the reinforcement depends on its ability to control crack development near the column.

Replacement of d_{v} with the alternative depth a_{pd}

(applicable only to Equation (4.19))
EC2:2023 also allows the shear-resisting effective depth d_{v} to be replaced by the alternative depth a_{pd} when the point of contra-flexure is located close to the support. This adjustment reflects the fact that the flexural behavior of the slab near the column depends on the available bending span. If the distance from the centroid of the control perimeter to the point where the bending moment becomes zero is small, the slab cannot develop the same punching shear resistance as in a region with a larger bending span. The use of a_{pd} therefore provides a more realistic representation of the local bending and cracking conditions near the support.

$$a_{\mathrm{pd}} = \sqrt{\frac{a_{\mathrm{p}}}{8} \cdot d_{\mathrm{v}}} \tag{4.22}$$

$$a_{\mathrm{p}} = \sqrt{a_{\mathrm{p,x}} \cdot a_{\mathrm{p,y}}} \tag{4.23}$$

where the distances $a_{\mathrm{p,x}}$ and $a_{\mathrm{p,y}}$ are measured along the slab's principal reinforcement directions. These distances correspond to the locations where the bending moments $m_{\mathrm{Ed,x}}$ and $m_{\mathrm{Ed,y}}$ become zero.

For regular flat slabs where lateral stability does not depend on frame action, a_{p} may be approximated as follows:

$$a_{\mathrm{p}} \approx \begin{cases} 0{,}22\,L_x, & \text{in the } x\text{-direction (if } 0{,}5 \leq L_x/L_y \leq 2) \\ 0{,}22\,L_y, & \text{in the } y\text{-direction (if } 0{,}5 \leq L_x/L_y \leq 2) \\ 0{,}22\,L, & \text{at edge columns } (L \text{ is the span perpendicular to the slab edge}) \\ 0{,}22\,L, & \text{at corner columns } (L \text{ is the largest span length adjacent to the considered column}) \end{cases}$$

In summary, EC2:2023 closed-form formulation for slabs without shear reinforcement is more explicit than the corresponding EC2:2004 rule. The resistance is no longer described only through a compact empirical size-effect expression, but is related more explicitly to the shape of support, reinforcement distribution, slab depth, and material-dependent roughness factors. This makes the new formulation more transparent and more closely connected to the physical behavior of punching failure.

VGU
Vietnamese-German University

4.3.3 Punching shear resistance of slabs with shear reinforcement

When punching shear reinforcement is provided, EC2:2023 expresses the design resistance through a combination of a reduced concrete contribution and an additional steel contribution. The punching shear resistance of slabs with shear reinforcement may be defined as

$$\tau_{\mathrm{Rd,cs}} = \eta_{\mathrm{c}} \cdot \tau_{\mathrm{Rd,c}} + \eta_{\mathrm{s}} \cdot \rho_{\mathrm{w}} \cdot f_{\mathrm{ywd}} \tag{4.24}$$

where

$\tau_{\mathrm{Rd,c}}$ punching shear stress resistance of the concrete member without shear reinforcement, which can be calculated according to Equation (4.19)

η_{c} reduction factor for concrete contribution, defined as the ratio of the punching shear stress resistance of the member to the applied design punching shear stress

$$\eta_{\mathrm{c}} = \frac{\tau_{\mathrm{Rd,c}}}{\tau_{\mathrm{Ed}}} \tag{4.25}$$

η_{s} shear enhancement factor describing concrete cracking and shear redistribution, expressed by the following formula:

$$\eta_{\mathrm{s}} = \frac{d_{\mathrm{v}}}{150\phi_{\mathrm{w}}} + \left(15\frac{d_{\mathrm{dg}}}{d_{\mathrm{v}}}\right)^{1/2}\left(\frac{1}{\eta_{\mathrm{c}} \cdot k_{\mathrm{pb}}}\right)^{3/2} \leq 0{,}8 \tag{4.26}$$

VGU Vietnamese-German University

d_{v} shear-resisting effective depth, as in Equation (4.15)

d_{dg} aggregate-dependent size parameter, as defined in Equation (3.22)

ϕ_{w} diameter of punching shear reinforcement, which shall not exceed a maximum value defined as follows, detailed in EC2:2023, Clause 12.5.1(3) and Figure 4.15:

- for single leg links and open stirrups: $\phi_{\mathrm{w,max}} = 10\sqrt{d/200}$
- for closed stirrups or bars with similar anchorage: $\phi_{\mathrm{w,max}} = 11\sqrt{d/200}$
- for bent up bars and headed bars: $\phi_{\mathrm{w,max}} = 16\sqrt{d/200}$

k_{pb} punching shear gradient enhancement coefficient as in Equation (4.21)

f_{ywd} design yield strength of shear reinforcement

ρ_{w} vertical shear reinforcement ratio at the control perimeter, determined as follows:

$$\rho_{\mathrm{w}} = \frac{A_{\mathrm{sw}}}{s_{\mathrm{r}} \cdot s_{\mathrm{t}}} \tag{4.27}$$

A_{sw} area of one leg of a shear reinforcement element

s_r the spacing in the radial direction of punching reinforcement, defined as the distance between successive perimeters of shear reinforcement, where s_1 and s_0 are illustrated in Figure 4.13

$$s_r = \max\left(s_0 + \frac{s_1}{2}, s_1\right) \tag{4.28}$$

s_t the spacing in the tangential direction of punching reinforcement, measuring how closely the reinforcements are distributed around the perimeter

In summary, EC2:2023 treats the punching resistance with shear reinforcement differently than EC2:2004. The new expression no longer relies only on a fixed reduced concrete term plus a reinforcement term, but introduces the factors η_c and η_s to reflect the actual effectiveness of both concrete and reinforcement under punching action.

VGU
Vietnamese-German University

4.3.4 Maximum punching shear stress resistance

Nevertheless, EC2:2023 gives an upper limit for the punching shear stress resistance when shear reinforcement is provided. The maximum punching shear resistance shall be limited according to the provisions of the code and is defined as

$$\tau_{\mathrm{Rd,max}} = \eta_{\mathrm{sys}} \cdot \tau_{\mathrm{Rd,c}} \tag{4.29}$$

where

η_{sys} a factor depending on the chosen type of shear reinforcement system, which may be calculated as

- for studs: $\eta_{\mathrm{sys}} = 0{,}70 + 0{,}63 \left(\frac{b_0}{d_v}\right)^{1/4} \geq 1{,}0$
- for links or stirrups: $\eta_{\mathrm{sys}} = 0{,}50 + 0{,}63 \left(\frac{b_0}{d_v}\right)^{1/4} \geq 1{,}0$

$\tau_{\mathrm{Rd,c}}$ punching shear stress resistance of the concrete member without shear reinforcement, which can be calculated according to Equation (4.19)

Based on the given formulations, it can be observed that the use of studs as shear reinforcement results in a higher maximum punching shear resistance compared to conventional links or stirrups, highlighting the importance of the chosen reinforcement system in punching design.

VGU Vietnamese-German University

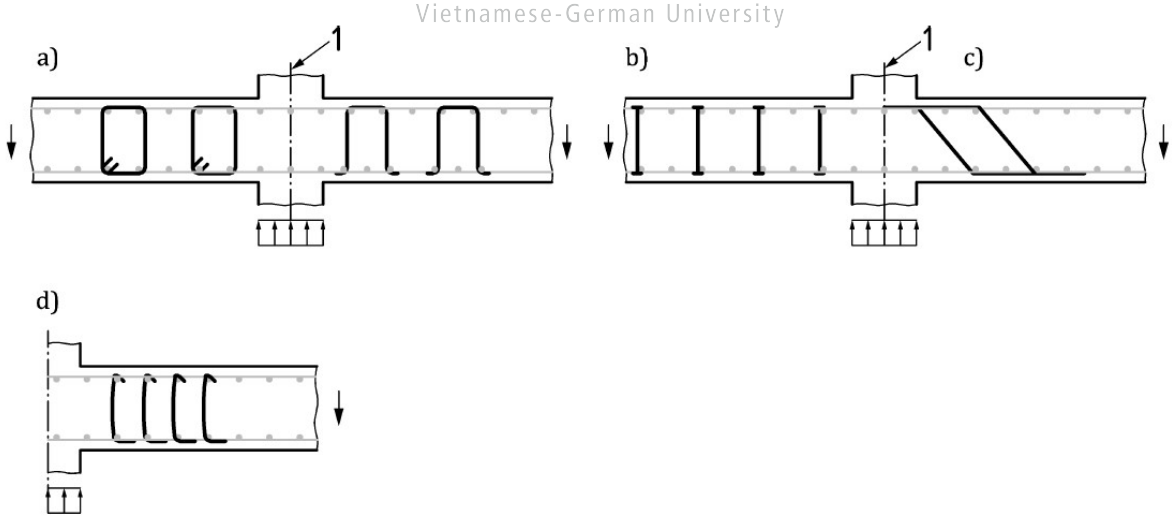

a) stirrups

b) double-headed studs and headed bars

c) bent-up bars

d) single-leg shear links

Key

1 center line of support

Figure 4.15: Different types of shear reinforcement (source: EN 1992-1-1:2023, Figure 12.6)

At internal columns, where no significant openings, inserts or slab edges are present within a distance of $5d_v$ from the control perimeter $b_{0,5}$, the maximum punching shear resistance may be enhanced using the coefficient η_{pm}. This enhancement accounts for compressive membrane action arising from the lateral restraint of the surrounding environment during deformation.

- for new structures: $\eta_{pm} = 1{,}0$
- for existing structures: $\eta_{pm} = 0{,}95 \left(\frac{h}{d}\right)^{1/2} \cdot \left(\frac{\sqrt{f_{ck}}}{\rho_l \cdot f_{yk}}\right)^{1/4} \geq 1{,}0$

In contrast to EC2:2004, the maximum punching shear resistance is expressed through the coefficient η_{sys}, which depends on the type of punching shear reinforcement system used in the design. As a result, the maximum achievable resistance is no longer independent of the reinforcement system. This distinction has practical importance, since reinforcement systems with improved anchorage behavior, such as double-headed studs, may reach higher maximum punching shear resistances than conventional links or stirrups. The revised formulation therefore makes the influence of the selected reinforcement system more explicit than in EC2:2004.

For internal columns without significant nearby openings, inserts, or slab edges, EC2:2023 also allows the beneficial influence of compressive membrane action to be considered through the factor η_{pm}. This further underlines that the new code seeks to represent the actual structural behavior of the slab more directly than the previous generation.

VGU
Vietnamese-German University

5. Results and Discussion

5.1 General material changes

The purpose of this section is to briefly discuss other factors that might indirectly or directly influence shear and punching shear design. They are not included in Clause 8 of EN 1992-1-1:2023, but are addressed in Clause 5 which discusses materials in general.

5.1.1 Concrete

After comparing Clause 5 of EN 1992-1-1:2023 and Clause 3 of EN 1992-1-1:2004 on the topic of materials, the following changes can be identified in the new generation:

- C100/115 was added to the new generation, as shown in Figure 5.1
- f_{ctm} for concrete larger than C50/60 was redefined as $f_{ctm} = 1{,}1 \cdot f_{ck}^{1/3}$

f	Strength classes for concrete [EN 206]															Governing formulae
	C12/15	C16/20	C20/25	C25/30	C30/37	C35/45	C40/50	C45/55	C50/60	C55/67	C60/75	C70/85	C80/95	C90/105	C100/115	
f_{ck}	12	16	20	25	30	35	40	45	50	55	60	70	80	90	100	—
f_{cm}	20	24	28	33	38	43	48	53	58	63	68	78	88	98	108	$f_{cm} = f_{ck} + 8$ MPa
f_{ctm}	1,6	1,9	2,2	2,6	2,9	3,2	3,5	3,8	4,1	4,2	4,3	4,5	4,7	4,9	5,1	$f_{ctm} = 0{,}3 f_{ck}^{2/3}$ ($f_{ck} \leq 50$ MPa) $f_{ctm} = 1{,}1 f_{ck}^{1/3}$ ($f_{ck} > 50$ MPa)
$f_{ctk;0,05}$	1,1	1,3	1,5	1,8	2,0	2,2	2,5	2,7	2,9	2,9	3,0	3,2	3,3	3,5	3,6	$f_{ctk;0,05} = 0{,}7 f_{ctm}$ (5 %-fractile)
$f_{ctk;0,95}$	2,0	2,5	2,9	3,3	3,8	4,2	4,6	4,9	5,3	5,4	5,6	5,9	6,2	6,4	6,6	$f_{ctk;0,95} = 1{,}3 f_{ctm}$ (95 %-fractile)

Vietnamese-German University

Figure 5.1: Compressive and tensile strength of concrete (source: EN 1992-1-1:2023, Table 5.1)

- Service temperature of design properties of concrete is from -40° to $+100^{\circ}$, written in EN 1992-1-1:2023, Clause 5.1.2(3).
- The modulus of elasticity of concrete depends on the factor k_E, which reflects the type of aggregate used in the concrete mix. Factor k_E varies from 5000 to 13500, with a value of 9500 for concrete made with quartzite aggregates.

$$E_{cm} = k_E \cdot f_{cm}^{1/3} \tag{5.1}$$

$$\Leftrightarrow E_{cm} = k_E \cdot (f_{ck} + 8)^{1/3}$$

- Compressive strength of concrete is defined in the following equation where η_{cc} is a factor accounting for the difference between the undisturbed compressive strength of cylinder and the effective compressive strength of a structural member, k_{tc} is a factor accounting for the effect of high sustained loads and loading time, γ_c is the partial safety factor for concrete and f_{ck} is the characteristic strength of concrete. In Equation (5.3), $f_{ck,ref}$ can be taken as 40 MPa unless the National Annex gives different values.

$$f_{cd} = \eta_{cc} \cdot k_{tc} \cdot \frac{f_{ck}}{\gamma_c} \tag{5.2}$$

$$\eta_{cc} = \left(\frac{f_{ck,ref}}{f_{ck}}\right)^{1/3} \leq 1{,}0 \tag{5.3}$$

$$k_{tc} = \begin{cases} 1{,}00 & t_{ref} \leq 28 \text{ days for normal and rapid strength development of concrete} \\ 1{,}00 & t_{ref} \leq 56 \text{ days for slow strength development of concrete and delayed loading} \\ 0{,}85 & \text{other cases, including when } f_{ck} \text{ is replaced by } f_{ck}(t) \end{cases}$$

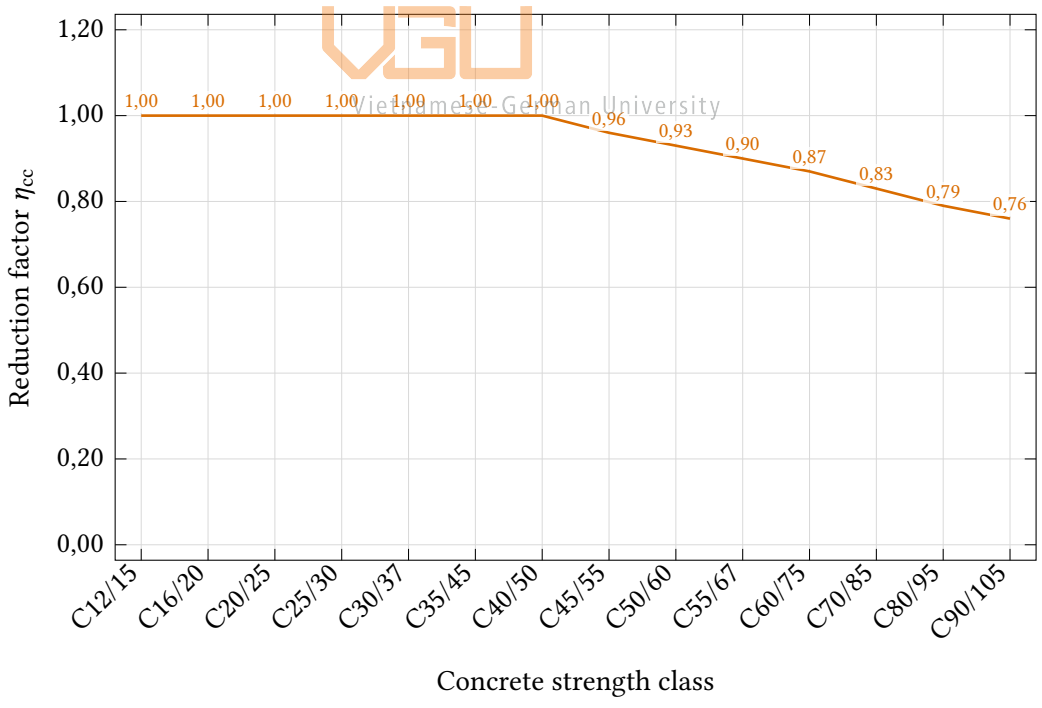

Figure 5.2: Calculation of η_{cc} for concrete strength from C12/15 to C90/105

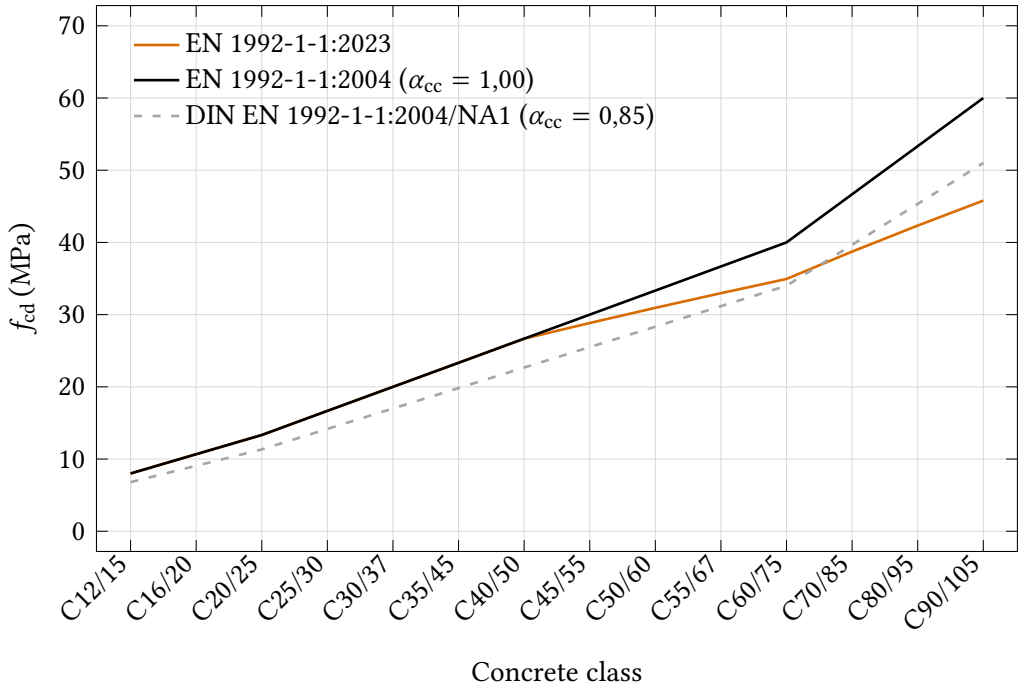

Figure 5.3: Design compressive strength f_{cd} versus concrete class according to EC2:2004, DIN EN 1992-1-1:2004/NA1, and EC2:2023

Figure 5.2 demonstrates that for every concrete class higher than $f_{ck} > 40$ MPa, there is a decrease of roughly 3% to 4% in f_{cd} due to the factor η_{cc}. The design values of compressive strength are illustrated in Figure 5.3.

VGU Vietnamese-German University

- The design tensile strength f_{ctd} is influenced by the factor k_{tt} which accounts for high sustained load and loading time on concrete tensile strength.

$$f_{ctd} = k_{tt} \cdot \frac{f_{ctk,0,05}}{\gamma_c} \tag{5.4}$$

$$k_{tt} = \begin{cases} 0{,}80 & t_{ref} \leq 28 \text{ days for normal and rapid strength development of concrete} \\ 0{,}80 & t_{ref} \leq 56 \text{ days for slow strength development of concrete and delayed loading} \\ 0{,}70 & \text{other cases, including when } f_{ck} \text{ is replaced by } f_{ck}(t) \end{cases}$$

5.1.2 Reinforcing steel

The following tables are applicable for ribbed reinforcement with $\varnothing \leq 50$ mm and indented reinforcement with $\varnothing \leq 14$ mm. These tables summarize the key mechanical properties of reinforcing steel used in EC2:2023. While Figure 5.4a defines the strength class of reinforcing steel from B400 to B700, each identified by its characteristic yield strength f_{yk}, Figure 5.4b defines ductility classes (A, B, C) which describe how much deformation the steel can experience before failure, expressed through its ratio of tensile strength to yield strength. Together, these

classifications help engineers choose reinforcement with appropriate strength and deformation capacity for different structural requirements.

Properties for stress-strain-diagram (Fig. 5.2)	Reinforcing steel strength class					
	B400	B450	B500	B550	B600	B700
Characteristic value f_{yk} [MPa]	400	450	500	550	600	700
NOTE All strength classes apply unless the National Annex excludes specific classes. Intermediate strength classes can be used, if included in the National Annex.						

(a) Strength classes of reinforcing steel (source: EN 1992-1-1:2023, Table 5.4)

Properties for stress-strain-diagram (Fig. 5.2)	Reinforcing steel ductility class		
	A	B	C
Characteristic value of $k = (f_t/f_y)_k$	1,05	1,08	1,15 to 1,35
Characteristic strain at maximum force ε_{uk}	2,5 %	5,0 %	7,5 %

(b) Ductility class of reinforcing steel (source: EN 1992-1-1:2023, Table 5.5)

Figure 5.4: Properties of reinforcing steel according to EN 1992-1-1:2023

In summary, these material changes help explain several of the trends discussed in the following sections. For instance, the reduction of f_{cd} for higher concrete classes contributes to the lower upper limit of shear and punching resistances in EC2:2023. The changes in material modelling therefore do not remain isolated at the constitutive level, but directly affect the resulting design capacities.

Vietnamese-German University

5.2 Shear

This section compares the shear design provisions of EC2:2004 and EC2:2023 by means of parametric calculations. Since EC2:2023 is formulated in terms of shear stress, the comparison is also carried out in stress form whenever possible. The purpose is to identify how the updated expressions modify the shear resistance of concrete members with and without shear reinforcement, evaluating the practical consequences for structural design.

Design shear stress τ_{Ed} is calculated by converting shear force from EC2:2004 into an equivalent shear stress. Since EC2:2004 is formulated in force terms (V_{Ed}) rather than as a direct shear-stress verification, an equivalent stress measure was derived for comparison. In the present study, $b_{\mathrm{w}}z$ was selected instead of $b_{\mathrm{w}}d$ as the reference area in order to maintain consistency with the EC2:2023 stress-based formulations. This should be understood as a conversion step for comparative purposes rather than as a direct EC2:2004 design expression.

5.2.1 Concrete members without shear reinforcement

Minimum shear resistance of concrete member

To examine the difference in minimum shear resistance between the two generations of Eurocode 2, the effective depth d is varied while keeping other factors constant. The chosen values are $c_{\mathrm{v}} = 30$ mm, $f_{\mathrm{ck}} = 30$ MPa, and $f_{\mathrm{yd}} = 435$ MPa. Since $d = h - c_{\mathrm{v}}$, the corresponding beam depths h are selected from 200 mm to 1400 mm.

VGU Vietnamese-German University

Figure 5.5 shows the ratio of the minimum shear resistances according to EC2:2023 and EC2:2004 for two aggregate sizes. Values greater than 1,0 indicate that the new generation predicts a higher minimum resistance than the previous one. Over the investigated range, EC2:2023 gives consistently higher values, with the largest differences occurring for shallow members. As the beam depth increases, the ratio gradually decreases, indicating that the advantage of the new equations becomes less pronounced for deeper members.

At 800 mm, the new EC2 predicts a shear capacity roughly 20% higher for a concrete member without shear reinforcement than the EC2:2004. The largest decrease occurs between 200 mm and 250 mm in $D_{\mathrm{lower}} = 32$ mm line, where the ratio decreases by about 0,17 (around 9% relative to the initial value). Beyond 250 mm, the reduction becomes much slower and almost constant, at approximately 0,03 to 0,05 (around 3% relative to the initial value) for every additional 50 mm.

This behavior shows that EC2:2023 increases the lower-bound shear resistance for small sections, while at the same time introducing a stronger reduction with increasing depth. The influence of the aggregate parameter d_{dg} is also visible, as the larger aggregate size leads to consistently higher predicted values.

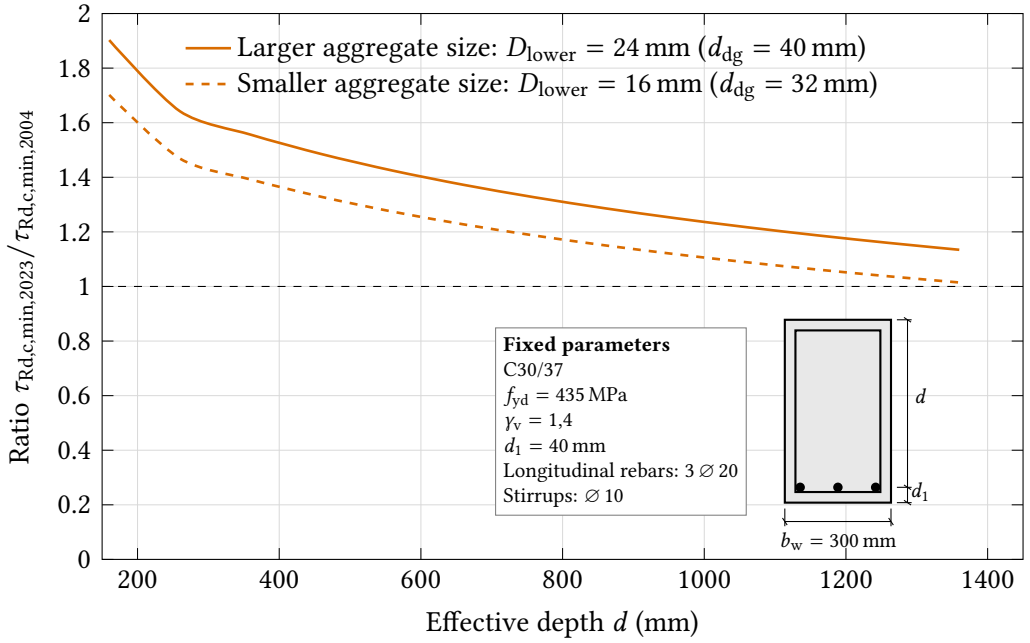

Figure 5.5: Influence of the aggregate parameter d_{dg} on the minimum design shear stress $\tau_{Rdc,min}$. For both cases, $\tau_{Rdc,min}$ decreases with increasing beam depth, while the larger value of d_{dg} gives consistently higher predicted values.

In summary, minimum shear resistance in EC2:2023 is more robust for shallow concrete members, but at the same time more selective with increasing depth of members. This reflects the general design tendency of EC2:2023, avoiding unrealistically low resistance in small elements while taking into account of brittleness in large members more clearly.

Shear resistance of concrete members without shear reinforcement

After examining the minimum resistance, the next step is to compare the shear resistance of members without shear reinforcement. Figure 5.6 and Figure 5.7 show the predicted values of $\tau_{Rd,c}$ according to EC2:2004 and EC2:2023 as functions of beam depth and concrete strength, respectively.

Figure 5.6 illustrates the effect of beam depth for two values of the aggregate parameter d_{dg}. In all cases, the shear resistance decreases with increasing depth, which reflects the size effect. However, the rate of decrease differs between the two code generations.

The key observation is the existence of a meeting point between the two curves in Figure 5.6. At the depth of 675 mm for d_{dg} = 40 mm and 400 mm for d_{dg} = 32 mm, the predictions of the two code generations converge. For beam depths below this point, EC2:2023 predicts slightly higher shear resistance than EC2:2004. Beyond this depth, the trend reverses and EC2:2023 becomes more conservative. This indicates a less conservative approach of shear capacity for beam depths under 400 mm, which may lead to more economical reinforcement selection in design.

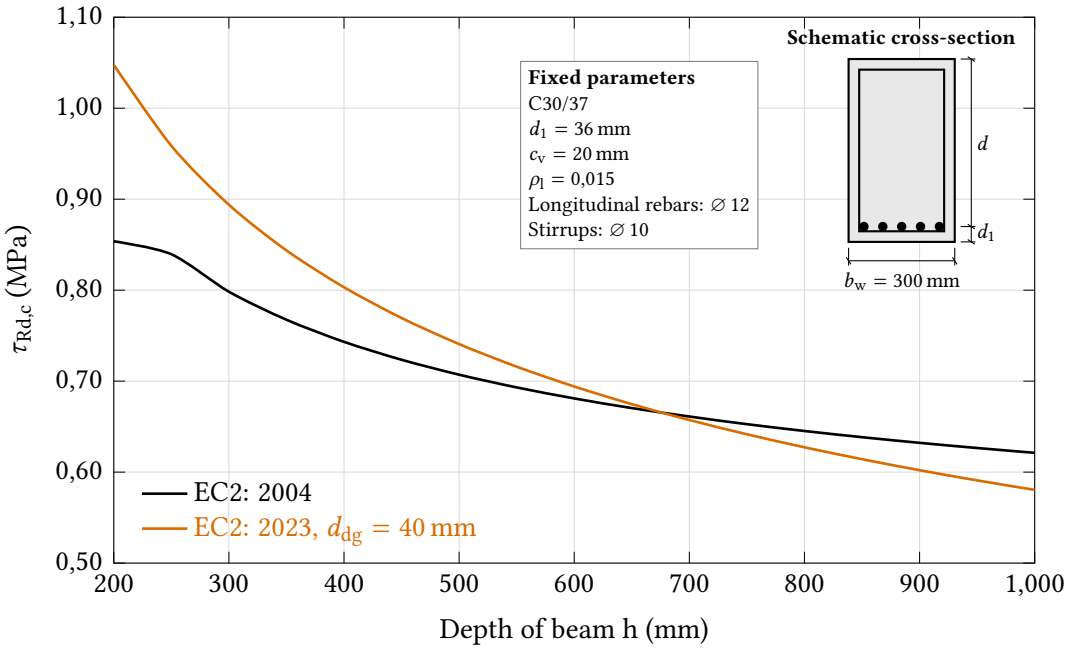

(a)

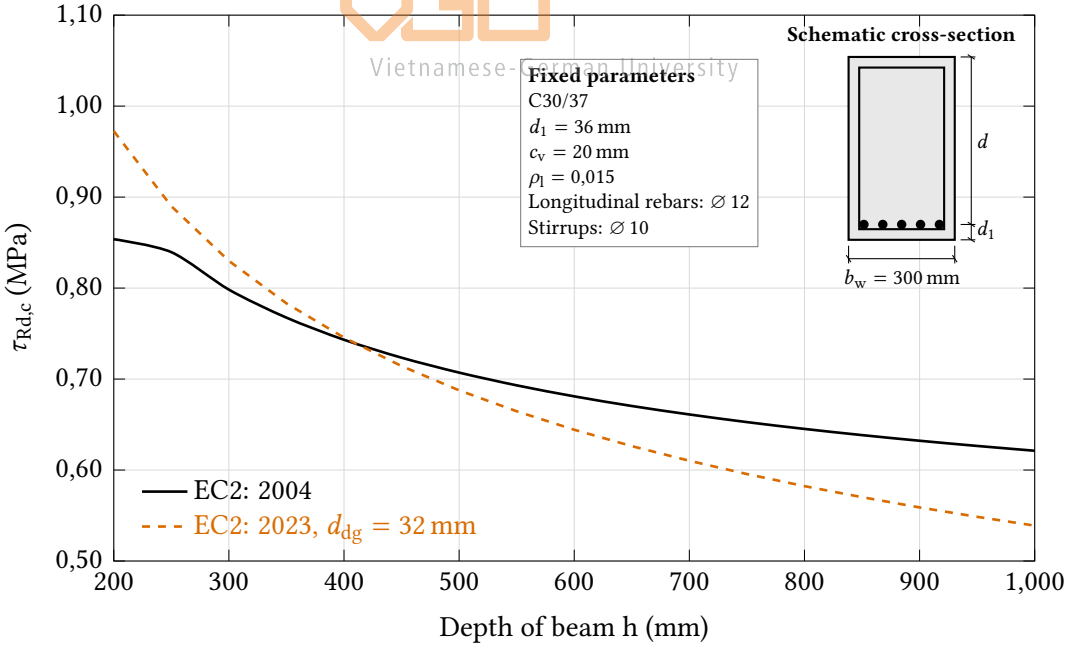

(b)

Figure 5.6: Comparison of $\tau_{Rd,c}$ according to EC2:2004 and EC2:2023 over a range of beam depths for: (a) $d_{dg} = 40\,mm$ and (b) $d_{dg} = 32\,mm$

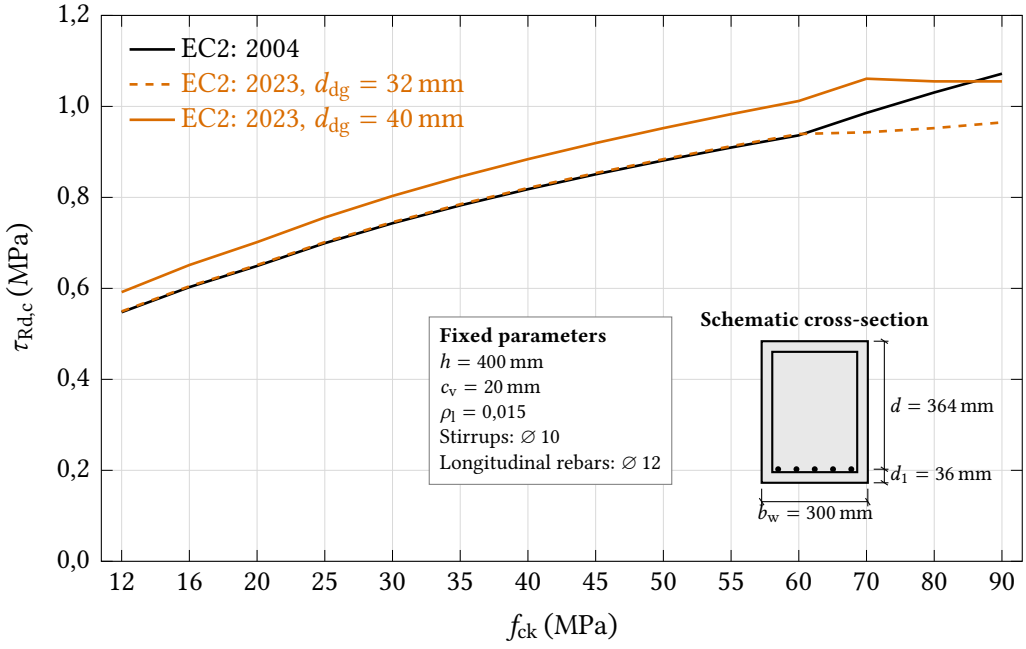

(a)

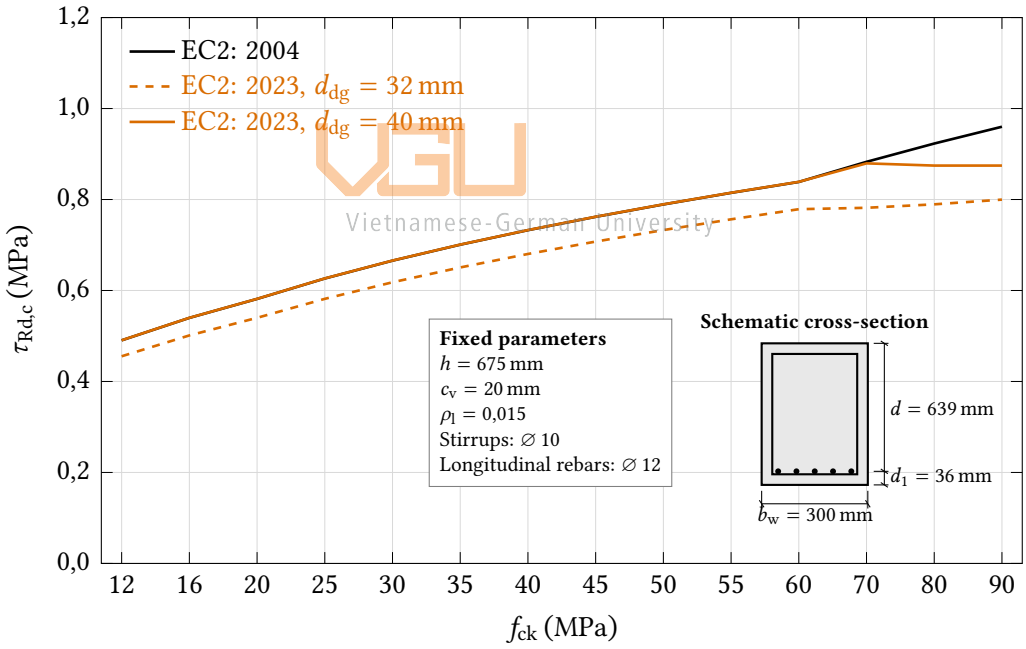

(b)

Figure 5.7: Shear resistance of concrete members without shear reinforcement as a function of concrete compressive strength f_{ck} according to EC2:2004 and EC2:2023 for different values of d_{dg}: (a) $h = 400$ mm and (b) $h = 675$ mm

Figure 5.7 extends this comparison by varying the concrete strength. For the beam depth of 400 mm, the curves of EC2:2023 remain close to or slightly above those of EC2:2004 over a wide strength range. For the beam depth of 675 mm, the difference becomes less favorable, particularly at higher concrete strengths. This trend is related to the reduced influence of the aggregate-dependent parameter d_{dg} in high-strength concrete. For $f_{ck} > 60$ MPa, EC2:2023

limits the beneficial effect of aggregate size, which is consistent with the observation that in high-strength concrete the bond between the aggregate particles and the cement paste can become strong enough for aggregate fracture to occur at cracks. This leads to smoother crack surfaces and reduces shear transfer through aggregate interlock ([25]). As a result, the increase in shear resistance with increasing concrete strength is moderated in comparison with normal-strength concrete.

Both figures confirm that the revised formulation shifts the balance: it is generally more favorable for typical members, but more restrictive for deeper members in which the size effect becomes more pronounced. In summary, EC2:2023 does not uniformly increase or decrease the resistance level, but modifies it depending on member depth and the associated size effect. This reflects the intention of the new generation to reflect a stronger size-effect reduction in order to avoid overestimation of shear resistance in large members, a limitation identified in the first generation of Eurocode 2.

Effect of replacing d by the mechanical shear span a_v

Table 5.1 summarizes the effect of replacing the effective depth d by the mechanical shear span a_v, as allowed by EC2:2023 when the effective shear span a_{cs} is smaller than $4d$.

The results show that this modification increases the predicted shear resistance for short shear spans. The enhancement is strongest when $a_{cs} = d$, where the increase reaches about 26% and gradually decreases as the shear span becomes larger. At $a_{cs} = 4d$, the modification vanishes because $a_v = d$.

VGU Vietnamese-German University

Table 5.1: Effect of replacing d by the mechanical shear span a_v for different shear spans $a_{cs} = nd$ according to EN 1992-1-1:2023

n	$a_v/d = \sqrt{n/4}$	Increase in v_{Rd}
1	0,500	+26,0%
2	0,707	+12,2%
3	0,866	+5,1%
4	1,000	0,0%

5.2.2 Concrete members with shear reinforcement

For members with shear reinforcement, the difference between EC2:2004 and EC2:2023 is much smaller than for members without shear reinforcement. In both code generations, the shear resistance provided by stirrups depends on the same fundamental parameters, such as the design yield strength of the reinforcement, the lever arm, and the selected value of cot θ. For ordinary practice, this part of the code changes much less than the sections without shear reinforcement.

The principal modification introduced in EC2:2023 considers the ductility class of the chosen shear reinforcement. When reinforcement of ductility class A is used, the adopted value of $\cot\theta$ must be reduced by 20%. The ductility-class limitation matters where class A reinforcement is actually known, specified and used. In many practical contexts of using B or C reinforcement, the numerical design impact may be limited. In summary, the significance of EC2:2023 in shear-reinforced concrete members lies less in a new resistance model than in a more explicit compatibility between reinforcement ductility, admissible strut inclination, and the compression field calculation.

5.2.3 Maximum shear resistance

The final part in the shear comparison concerns the maximum shear stress resistance in the concrete compression field. Figure 5.8 and Figure 5.9 compare the values predicted by EC2:2004 and EC2:2023 over a range of concrete strength classes.

Figure 5.8 shows that the maximum shear stress resistance increases with increasing concrete strength in both codes. For lower concrete classes, the difference between the two formulations is moderate. Then, the curves approach each other around C40/50. Figure 5.9 makes this trend clearer by plotting the ratio $\tau_{\mathrm{Rd,max,2023}}/\tau_{\mathrm{Rd,max,2004}}$. The ratio remains below 1,0 over the full range, which indicates that EC2:2023 gives lower values than EC2:2004.

Thus, while the revised code may increase the predicted resistance of concrete members without shear reinforcement in certain practical ranges, it simultaneously reduces the maximum allowable stress in the compression field. This means that EC2:2023 tends to be more cautious with respect to brittle compression failure, especially at higher concrete strengths, confirming the statement made earlier.

In conclusion, the results in this section show that EC2:2023 should not be interpreted as uniformly more conservative or less conservative than EC2:2004. Its main influence is a redistribution of resistance. The revised code is often more favorable for standard beam dimensions, but becomes increasingly restrictive for larger beams and higher concrete strength where the brittleness and the maximum shear resistance failure mechanisms become critical.

Vietnamese-German University

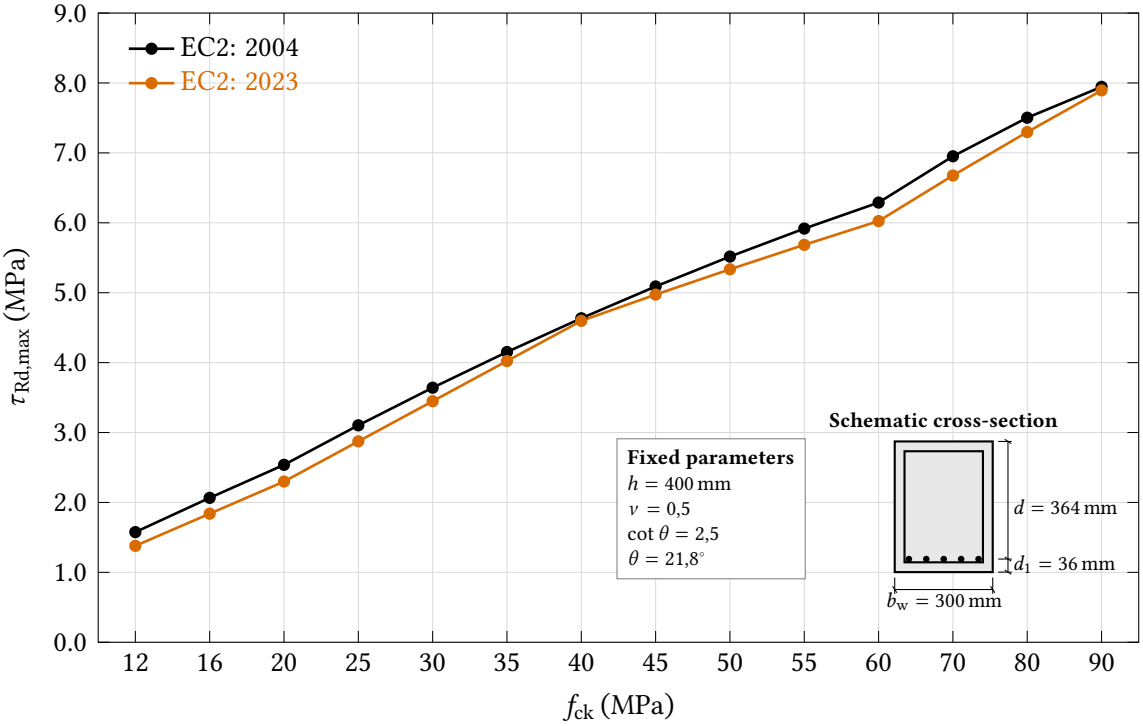

Figure 5.8: Comparison of the maximum shear stress in concrete strut $\tau_{Rd,max}$ between EN 1992-1-1:2004 and EN 1992-1-1:2023 from C12/15 to C90/105

VGU
Vietnamese-German University

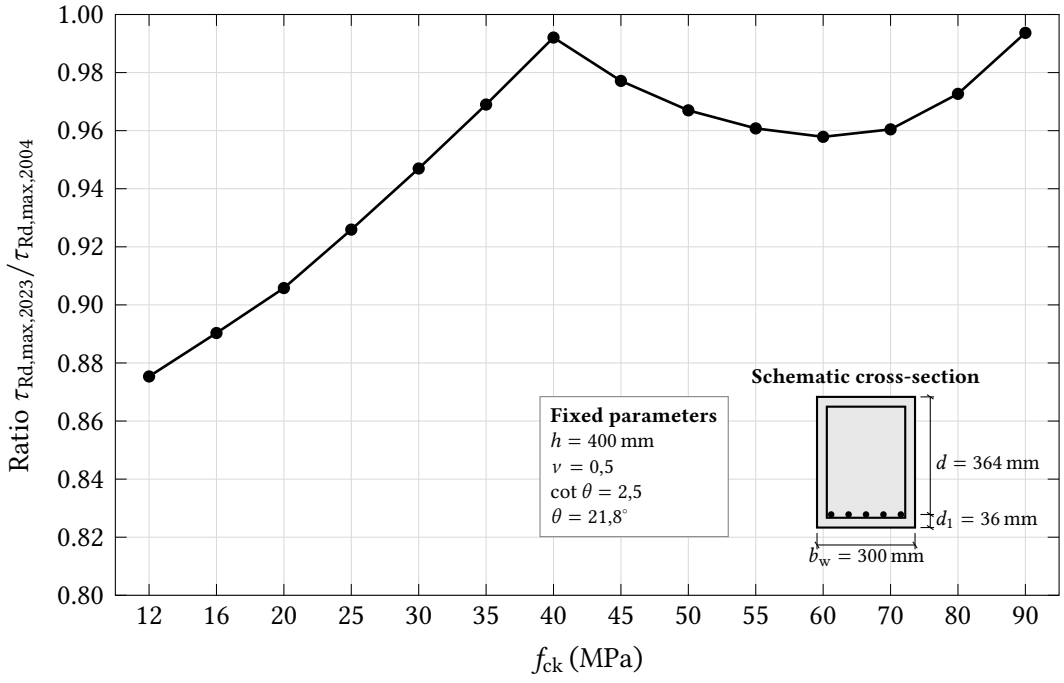

Figure 5.9: Ratio of maximum shear stress allowed in concrete strut $\tau_{Rdc,max,2023}/\tau_{Rdc,max,2004}$ from C12/15 to C90/105

5.3 Punching shear

To evaluate the evolution of punching shear design provisions between EC2:2004 and EC2:2023, it is essential to recognize a fundamental difference in how each Eurocode generation defines the control perimeter for design shear stresses. The 2023 revision evaluates design shear stress at the perimeter $b_{0,5}$ (located at 0,5d from the column face), while the 2004 generation adopts the control perimeter u_1 (located at 2d).

Since shear stresses evaluated at different distances from the support correspond to different internal stress states, a direct comparison of punching shear stresses is not physically meaningful. For this reason, the present study compares the codes based on the resulting punching shear resistance force of the slab rather than shear stress values. This provides a more consistent basis for assessing the practical differences between the two generations.

5.3.1 Slabs without punching shear reinforcement

Influence of slab thickness, concrete strength, and aggregate size

Figure 5.10 presents the ratio $V_{\mathrm{Rd,c,2023}}/V_{\mathrm{Rd,c,2004}}$ as a function of slab thickness for different concrete strength classes and aggregate sizes. Values above unity indicate a higher predicted punching resistance according to EC2:2023, whereas values below unity indicate a lower resistance.

VGU Vietnamese-German University

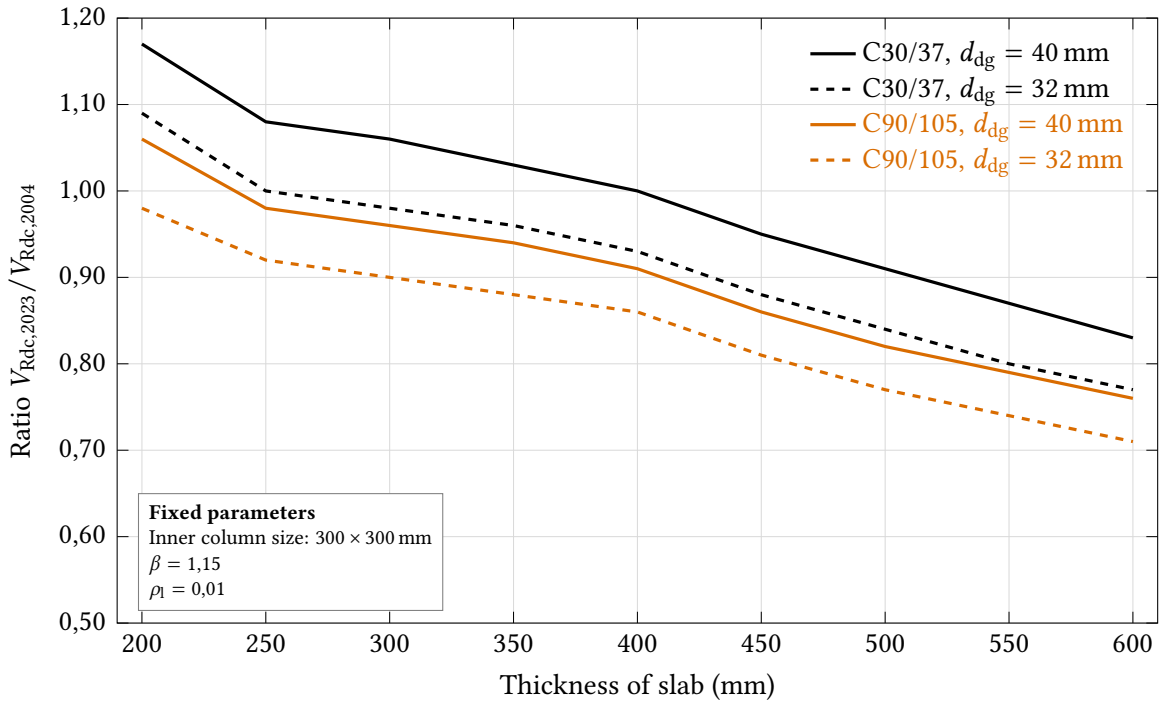

Figure 5.10: Ratio $V_{\mathrm{Rdc,2023}}/V_{\mathrm{Rdc,2004}}$ versus slab thickness for various concrete classes and aggregate sizes

In general, shear resistance of concrete slabs decreases as thickness of slabs increases. For thin slabs, from 200 mm to 250 mm, the ratios remain close to or slightly above 1,0 for C30/37. This shows that the new code may predict capacities similar to or slightly higher than those of EC2:2004.

However, as the slab thickness increases, all curves decrease and fall below 1,0. For example, at h = 600 mm, the ratios range from approximately 0,70 to 0,85, corresponding to a 15% to 30% lower resistance than that of EC2:2004. This means that the revised code becomes more conservative for thicker slabs. The reduction is most pronounced for high-strength concrete while larger aggregate sizes mitigate the decrease to some extent as shown in curve C90/105, $d_{dg} = 40$ mm.

For a given slab thickness, the C30/37 curves exhibit the highest ratios, indicating that the transition from the 2004 to the 2023 code has the least impact on normal-strength concrete. This influence remains the same for concrete grade $\leq$ C60/75. In contrast, the high-strength class C90/105 consistently yields the lowest ratios due to the revised strength and size-effect factors in EC2:2023, particularly k_{pb}. Maximum aggregate size also affects the results. For each concrete class, curves with $d_{dg} = 40$ mm lie above those with $d_{dg} = 32$ mm, demonstrating that the reduction in slabs' capacity is less pronounced for larger aggregates.

In summary, these trends indicate that EC2:2023 treats the punching resistance of thick slabs more restrictively than EC2:2004. This is consistent with the stronger size-effect influence and the more explicit role of support geometry and aggregate-related parameters in the revised formulation.

VGU Vietnamese-German University

Influence of column size through k_{pb}

The purpose of Table 5.2 is not to serve as a direct comparison between the two Eurocode generations, but rather as an explanatory EC2:2023 sub-analysis showing how the coefficient k_{pb} influences the punching shear resistance within the new generation. To explain the trends observed in Figure 5.10 more clearly, Table 5.2 summarizes the variation of the coefficient k_{pb} with column size for a fixed slab thickness $t = 250$ mm, $d_v = 208$ mm, concrete class C30/37, reinforcement ratio $\rho_l = 0{,}01$, and aggregate parameter $d_{dg} = 40mm$. Table 5.2 shows that the coefficient k_{pb} decreases as the column dimensions increase from 200 × 200 mm to 500 × 500 mm. As a result, the calculated punching shear stress resistance $\tau_{Rd,c,2023}$ also decreases. Taken alone, this would suggest a less favorable response for larger columns, reflecting that EC2:2023 penalizes larger support areas more explicitly than EC2:2004.

Column size	k_{pb}	$\tau_{Rdc,2023}$ [MPa]	Relative decrease in $\tau_{Rdc,2023}$
200 × 200	2,41	1,86	0% (Reference)
250 × 250	2,26	1,74	-6%
300 × 300	2,14	1,64	-11%
350 × 350	2,03	1,56	-16%
400 × 400	1,94	1,49	-20%
450 × 450	1,86	1,43	-23%
500 × 500	1,79	1,37	-26%

Table 5.2: Punching design coefficients and relative decrease for different column sizes

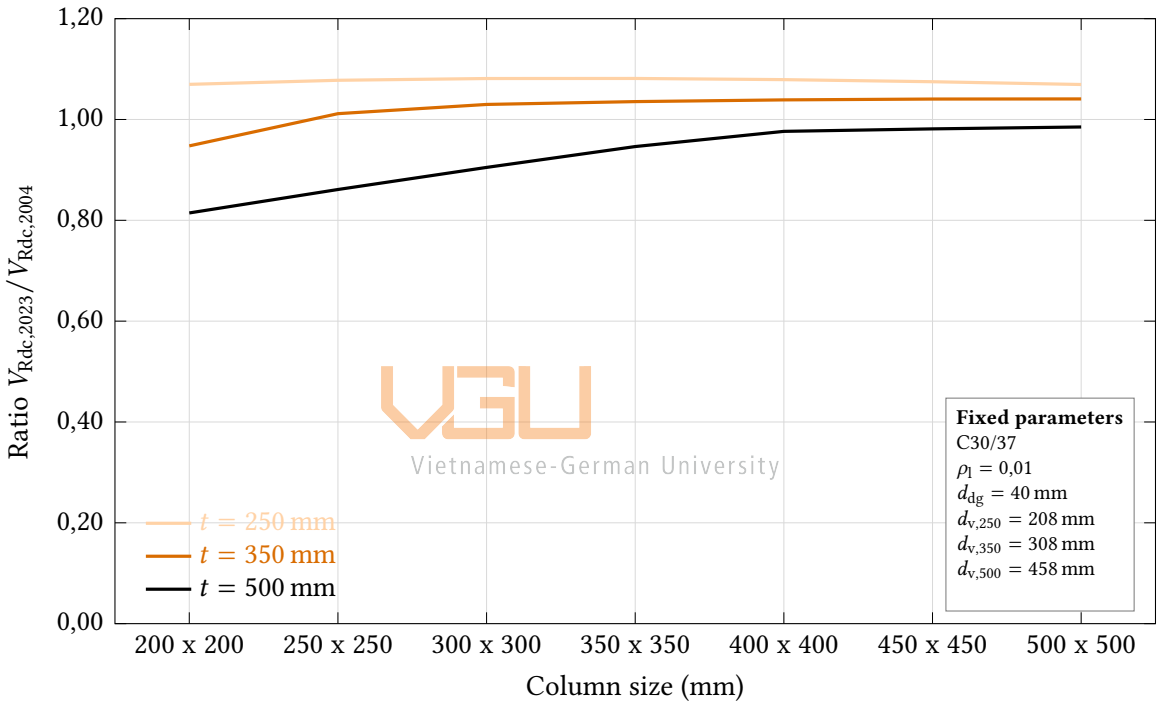

Figure 5.11: Comparison of the ratio $V_{Rdc,2023}/V_{Rdc,2004}$ for varying column sizes and slab thicknesses

A direct comparison between EC2:2004 and EC2:2023 was carried out in force form rather than in stress form, because the two codes evaluate punching shear stresses on different control perimeters. When the calculated stresses are converted into punching shear resistance forces using the respective code-defined control perimeters, a different trend is obtained. Figure 5.11 shows that the ratio $V_{Rd,c,2023}/V_{Rd,c,2004}$ remains close to unity and increases slightly with increasing column size for the investigated slab thicknesses. For $t = 250$ mm, the ratio stays approximately between 1,07 and 1,08. For $t = 350$ mm, it increases from about 0,95 to about 1,04, while for $t = 500$ mm, it increases from about 0,81 to about 0,98.

This indicates that the reduction in $\tau_{Rd,c,2023}$ caused by the decreasing value of k_{pb} is partly compensated by the larger resistance force obtained from the corresponding control perimeter.

Therefore, the stress-level trend within EC2:2023 should not be interpreted directly as a more conservative overall comparison with EC2:2004.

Replacement of d_v with the alternative depth a_{pd}

EC2:2023 allows the shear-resisting effective depth d_{v} to be replaced by the modified depth a_{pd} when the point of contra-flexure is located close to the support. This may be used when the distance to the point of contra-flexure is smaller than $8d_{\mathrm{v}}$. Table 5.3 summarizes the effect of this replacement for different values of the shear span $a_{\mathrm{p}} = nd_{\mathrm{v}}$.

When the shear span is short, the modified depth a_{pd} becomes smaller than d_{v}, thus the resulting punching shear resistance $\tau_{\mathrm{Rd,c}}$ increases. The enhancement is largest for $a_{\mathrm{p}} = d_{\mathrm{v}}$, where the increase reaches about 41%, and gradually diminishes as the shear span becomes larger. At $a_{\mathrm{p}} = 8d_{\mathrm{v}}$, the modification vanishes because $a_{\mathrm{pd}} = d_{\mathrm{v}}$.

n	$a_p = nd_v$	$a_{pd}/d_v = \sqrt{n/8}$	$\frac{\tau_{\mathrm{Rd,c}}(a_{\mathrm{pd}})}{\tau_{\mathrm{Rd,c}}(d_v)} = (8/n)^{1/6}$
1	$1d_v$	0,354	1,414
2	$2d_v$	0,500	1,260
3	$3d_v$	0,612	1,177
4	$4d_v$	0,707	1,122
5	$5d_v$	0,791	1,082
6	$6d_v$	0,866	1,051
7	$7d_v$	0,935	1,028
8	$8d_v$	1,000	1,000

Vietnamese-German University

Table 5.3: Effect of replacing d_{v} with a_{pd} for different shear spans $a_{\mathrm{p}} = nd_{\mathrm{v}}$

This behavior reflects the mechanical shear-span effect already observed in the shear comparison for beams. In practical terms, EC2:2023 permits a more favorable punching resistance when the bending span near the support is short, thereby linking the punching check more directly to the actual slab action.

5.3.2 Slabs with punching shear reinforcement

For slabs with punching shear reinforcement, the most significant change is not only the basic resistance expression, but also the revised maximum punching shear resistance formulation. Figure 5.12 presents the ratio $V_{\mathrm{Rd,max,2023}}/V_{\mathrm{Rd,max,2004}}$ as a function of concrete strength for two reinforcement systems, namely stud rails and conventional links or stirrups.

Overall, a downward trend is observed for both reinforcement systems as the compressive strength increases. For C12/15, the ratio remains above approximately 0,70, whereas for C90/105 it decreases to values close to 0,30. This indicates that the maximum punching shear resistance according to EC2:2023 becomes substantially smaller than that predicted by

EC2:2004 as the concrete strength increases, despite identical geometrical and reinforcement parameters.

The reason for this reduction lies in the revised formulation of EC2:2023 as expressed in the following equation:

$$\tau_{\mathrm{Rd,max}} = \eta_{\mathrm{sys}} \cdot \tau_{\mathrm{Rd,c}}$$

As a result, the effect of punching shear reinforcement is restricted more explicitly than in EC2:2004. Since $\tau_{\mathrm{Rd,c}}$ itself is limited by $\frac{0{,}5}{\gamma_v}\sqrt{f_{\mathrm{ck}}}$, the achievable increase in maximum punching resistance becomes modest as the compressive strength of concrete increases.

The separation between the two curves in Figure 5.12 reflects the different values of the system coefficient η_{sys} for stud rails and for links or stirrups. Stud systems achieve slightly higher upper-bound capacities, because their anchorage behavior is more favorable. However, the difference between the two reinforcement systems remains relatively small compared with the overall reduction in capacity introduced by the revised upper-bound model.

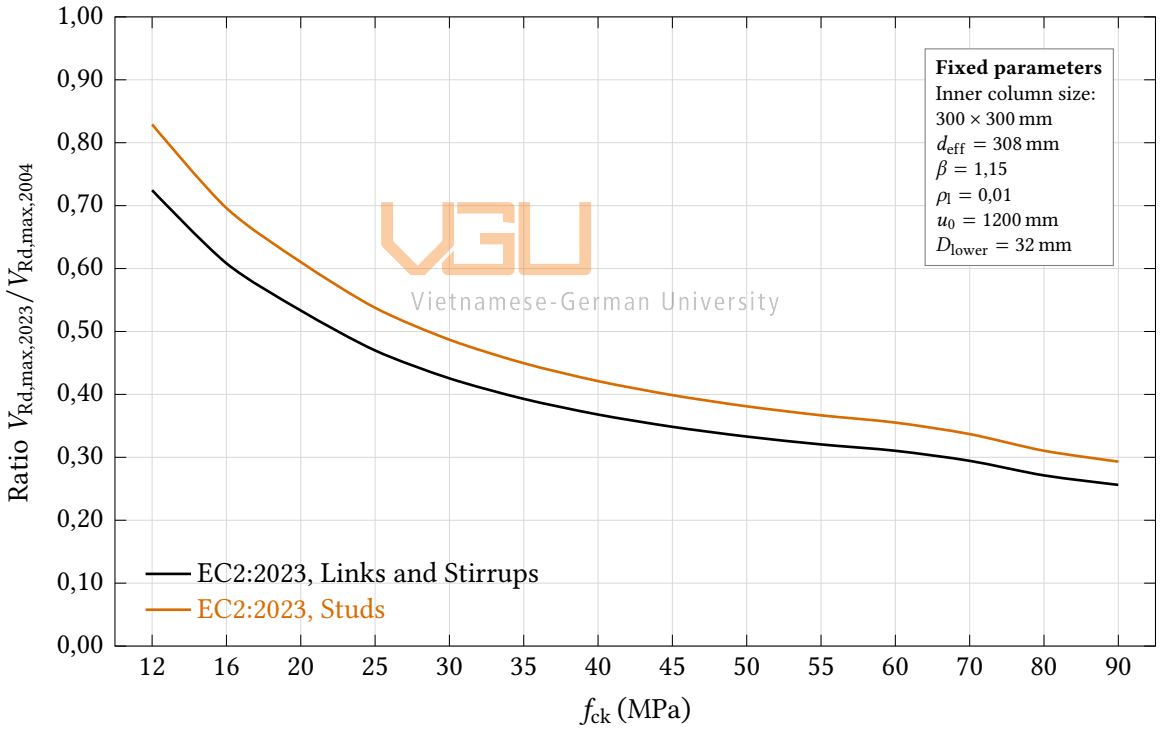

Figure 5.12: Comparison of the ratio $V_{\mathrm{Rd,max,2023}}/V_{\mathrm{Rd,max,2004}}$ for varying concrete compressive strength f_{ck}, showing the influence of the punching shear reinforcement arrangement for studs and for links and stirrups

Overall, the results show that the revised punching shear model of EC2:2023 produces significantly lower maximum punching shear resistance than that predicted by the previous generation of the code. This reflects a shift toward a more mechanical approach, consistent with the behavior observed in the preceding section for members without shear reinforcement. Therefore, the updated limits in EC2:2023 distinguish more explicitly between different punching shear reinforcement systems and aim to prevent brittle punching failures, particu-

larly in slabs made of higher-strength concrete.

VGU
Vietnamese-German University

6. Conclusion

This thesis investigated the key changes of shear and punching shear design provisions from EN 1992-1-1:2004 to the new generation EN 1992-1-1:2023. It examined how the revised formulations influence resistances of members with and without shear reinforcement, with particular attention to size effect, aggregate influence, and the updated material definitions. The main conclusions are summarized as follows.

Key findings on materials and general provisions

Several updated material rules in EN 1992-1-1:2023 indirectly affect shear and punching design outcomes. The new code extends the concrete strength classes up to C100/115 and redefines tensile strength for high-strength concrete using $f_{ctm} = 1{,}1 \cdot f_{ck}^{1/3}$. The introduction of aggregate-dependent stiffness through k_E refines the concrete's modulus of elasticity. Most importantly for strength design, the new definition of design compressive strength incorporates η_{cc} and k_{tc}, resulting in a reduction of f_{cd} for $f_{ck} > 40$ MPa. This adjustment confirms a more cautious design of high-strength concrete in ultimate limit state verification. Overall, these changes establish a more explicit link between material performance and structural safety than that of the 2004 generation.

VGU
Vietnamese-German University

Shear design

The comparison of shear behavior highlights a shift in design philosophy.

- The minimum shear resistance of concrete members without shear reinforcement is generally higher in EN 1992-1-1:2023 than in EN 1992-1-1:2004 across the investigated depth range. The increase is most pronounced for shallow beams, while the ratio gradually declines as depth increases. This suggests that the revised formulation provides improved robustness against excessively low minimum capacities in small members.
- For the shear resistance of members without shear reinforcement, EN 1992-1-1:2023 predicts higher resistances than the 2004 code for typical beam depths, but becomes more conservative for deep members. The existence of clear convergence points confirms that the new generation introduces a stronger size-effect penalty to avoid overestimation in large structural elements.
- The influence of aggregate size remains significant in the new code. Larger aggregate sizes result in higher predicted resistances, while the reduction of d_{dg} for $f_{ck} > 60$ MPa

contributes further to the conservative treatment of high-strength concrete.

- The formulation for shear resistance with stirrups remains largely consistent between the two generations. However, EN 1992-1-1:2023 introduces an additional ductility-related restriction: for reinforcement of ductility class A, the allowable $\cot\theta$ must be reduced by 20%, increasing conservatism in relevant cases.
- The maximum allowable shear stress in the compression strut is only slightly reduced in the new code, indicating that the upper-bound mechanism remains broadly aligned with previous principles while being marginally more restrictive for higher concrete classes.

In summary, EN 1992-1-1:2023 tends to be more favorable for shallow, standard beams without shear reinforcement, while providing a safer, more realistic size-effect treatment for deeper members.

Punching shear design

Punching shear design undergoes more substantial conceptual and numerical changes.

- A fundamental shift is introduced by relocating the control perimeter from $2d$ in the 2004 code to $0{,}5d$ in EN 1992-1-1:2023.
- For slabs without punching shear reinforcement, EN 1992-1-1:2023 provides similar or slightly higher resistances for thin slabs, but clearly lower resistances for thick slabs. The reduction becomes more pronounced with increasing slab thickness and higher concrete strength classes. This indicates that the factor k_{pb} penalizes large load-transfer regions and thick slabs, aligning with concerns about brittle punching failures.
- The column-size sensitivity embedded in the new generation reinforces this design intent. Increasing column dimensions systematically reduces k_{pb} and thus lowers $\tau_{\mathrm{Rdc,2023}}$, confirming a more conservative approach for large columns and heavy load-transfer conditions.
- For slabs with punching shear reinforcement, the new upper-bound rule Equation (4.29) leads to a significant reduction of the maximum punching capacity compared with that of EN 1992-1-1:2004, particularly for high-strength concrete. This effectively limits the extent to which reinforcement can elevate ultimate capacity.

From a practical design perspective, these changes imply that engineers may achieve more economical designs for typical shallow members, while needing to adopt more conservative approaches for thick slabs, large columns, and high-strength concrete. The increased sensitivity to geometry and material parameters also requires more careful modelling and parameter selection compared to EC2:2004.

Limitations

This thesis draws its conclusions from a literature review and a parametric comparison of EN 1992-1-1:2004 and EN 1992-1-1:2023. While this approach provides a structured basis for identifying shifts in design philosophy, the results should be interpreted with appropriate caution. The thesis does not include experimental data to support the claims, and the chosen parameter ranges and assumptions may not fully reflect the diversity observed in real structural systems.

Furthermore, the analysis is limited to code-based predictions (calculations according to the rules established in the design codes) rather than actual structural behavior (how real concrete structures respond under load). As such, the conclusions reflect differences between design models rather than experimentally verified performance differences. The comparisons are also based on simplified structural models (idealized representations of structures used in calculations) and selected boundary conditions (assumed supports and constraints), which may not fully represent complex phenomena such as load redistribution, cracking behavior, and realistic support conditions.

Moreover, the analysis, in which one variable is systematically varied and presented in the graphs, focuses on individual parameter variations. Potential interaction effects among key variables such as reinforcement ratio, slab thickness, and aggregate size were not examined in a fully coupled manner. This is reflected in the schematic reinforced-concrete cross-section embedded in Figure 5.6b and Figure 5.6a, which represent assumed member geometry and reinforcement layout rather than as an exact section valid for every plotted value of the effective depth. In the parametric study, the longitudinal reinforcement ratio was kept constant at $\rho_l = 0{,}015$ while the effective depth d was varied. Since $\rho_l = A_{sl}/(b_w \cdot d)$, maintaining a constant reinforcement ratio with increasing effective depth would require the longitudinal reinforcement area A_{sl} to increase accordingly. As a result, the exact number and arrangement of longitudinal bars would not remain unchanged over the full range of d considered in the graph. The illustration therefore serves only to illustrate the general section type and the fixed reference parameters, such as b_w, c_v, and the assumed reinforcement detailing, while the plotted curves should be interpreted as the response of an idealized parametric model rather than of a single identical beam section.

Another limitation arises from differences in code-defined material models and modelling assumptions, which may affect the comparability of some results. In particular, the strain definitions for $f_{ck} \geq 50\,\text{MPa}$ differ between the two generations of EC2. This may lead to variations in calculated reinforcement ratios and, consequently, influence the relative positions and shapes of the comparative curves.

Although selected detailing provisions that are directly relevant to the interpretation and application of the verifications are included where necessary, the thesis does not aim to provide a comprehensive treatment of all detailing rules, anchorage provisions, or alternative design

approaches such as strut-and-tie models. These aspects may also influence shear and punching shear behavior in practice, but they lie beyond the main scope of the present comparison.

Within these limitations, the thesis nevertheless aims to provide a useful basis for understanding how the shear and punching shear provisions have evolved from EN 1992-1-1:2004 to EN 1992-1-1:2023. At the same time, the limited limitations identified so far of this thesis point to areas in which further research would be valuable. By concentrating on the main design expressions and verification formats, it highlights the principal conceptual and numerical differences between the two generations and supports a more informed interpretation of the revised provisions.

VGU
Vietnamese-German University

A. Comparison Tables

VGU
Vietnamese-German University

Table A1: Comparison of design actions and members without shear reinforcement in EC2:2004 and EC2:2023

Verification item	**EN 1992-1-1:2004**	**Clause**	**EN 1992-1-1:2023**	**Clause**
Design action for linear members	V_{Ed} used directly in force form	6.2.1	$\tau_{Ed} = \dfrac{V_{Ed}}{b_w z}$	(8.18)
Design action for planar members	No single general stress expression in 6.2	–	$\tau_{Ed} = \dfrac{v_{Ed}}{z}$	(8.19)
Lever arm	$z \approx 0{,}9d$	6.2.3(1)	$z \approx 0{,}9d$	8.2.1(3)
Resistance of concrete members	$V_{Rd,c} = \left[C_{Rd,c} \cdot k \cdot (100 \cdot \rho_l \cdot f_{ck})^{1/3} + k_1 \cdot \sigma_{cp}\right] b_w \cdot d$ $\geq v_{min} = 0{,}035 \cdot k^{3/2} \cdot f_{ck}^{1/2}$	(6.2a), (6.2b)	$\tau_{Rd,c} = \frac{0{,}66}{\gamma_v} \cdot \left(100 \cdot \rho_l \cdot f_{ck} \cdot \frac{d_{dg}}{d}\right)^{1/3} \geq \tau_{Rd,c,min}$	(8.27)
Minimum resistance	$v_{min} = 0{,}035 \cdot k^{3/2} \cdot f_{ck}^{1/2}$	(6.3N)	$\tau_{Rd,c,min} = \frac{11}{\gamma_v} \cdot \sqrt{\frac{f_{ck}}{f_{yd}} \cdot \frac{d_{dg}}{d}}$	(8.20)
Longitudinal reinforcement ratio	$\rho_l = \dfrac{A_{sl}}{b_w d} \leq 0{,}02$	(6.2a)	$\rho_l = \dfrac{A_{sl}}{b_w d}$	(8.28)
Short shear span refinement	$\beta = \dfrac{\max(a_v;\, 0{,}5d)}{2d}$ when $a_v \leq 2d$	6.2.2(6)	$a_v = \sqrt{\dfrac{a_{cs} d}{4}}$	(8.29)
Effective shear span	Not formulated as a general parameter in the same way	–	$4d \geq a_{cs} = \left\lvert\dfrac{M_{Ed}}{V_{Ed}}\right\rvert \geq d$	(8.30)
Axial force N_{Ed}	$+k_1 \sigma_{cp}$ directly inside $V_{Rd,c}$	(6.2a), (6.2b)	$k_{vp} = 1 + \dfrac{N_{Ed}}{\lvert V_{Ed}\rvert} \dfrac{d}{3a_{cs}} \geq 0{,}1$	(8.31)
Alternative route for N_{Ed}	Effect already included in (6.2a) and (6.2b)	–	$\tau_{Rd,c,min} \leq \tau_{Rd,c} = \tau_{Rd,c,0} - k_1 \sigma_{cp} \leq \tau_{Rd,c,max}$	(8.32)
	–	–	$\tau_{Rd,c,0} = \dfrac{0{,}66}{\gamma_v} \left(100 \rho_l \cdot f_{ck} \cdot \dfrac{d_{dg}}{d}\right)^{1/3}$	(8.33)
	$k_1 = 0{,}15$	–	$k_1 = \dfrac{0{,}5}{a_{cs,0}} \left(e_p + \dfrac{d}{3}\right) \dfrac{A_c}{b_w z} \leq 0{,}18 \dfrac{A_c}{b_w z}$	(8.34)
	–	–	$\tau_{Rd,c,max} = 2{,}15\, \tau_{Rd,c,0} \left(\dfrac{a_{cs,0}}{d}\right)^{1/6} \leq 2{,}7\, \tau_{Rd,c,0}$	(8.35)

Notes: In EC2:2004, $C_{Rd,c} = 0{,}18/\gamma_c$ is the recommended values. In EC2:2023, d_{dg} may be taken as $16 + D_{lower} \leq 40$ mm for $f_{ck} \leq 60$ MPa and $16 + D_{lower}(60/f_{ck})^2 \leq 40$ mm for $f_{ck} > 60$ MPa.
EC2:2004 is primarily written in terms of shear force resistance V_{Rd}, whereas EC2:2023 is primarily written in terms of shear stress resistance τ_{Rd}. For EC2:2023, the assumption for $z \approx 0{,}9d$ may be made unless given by the National Annex. Minimum shear reinforcement may still be required for linear members according to Clause 12. For statically determinate linear members with $d > 500$ mm, minimum shear reinforcement is mandatory; if this is not possible, the alternative verification method according to I.8.3.1(3) applies.

Vietnamese-German University

Table A2: Comparison of members with shear reinforcement in EC2:2004 and EC2:2023 (Vertical)

Verification item	EN 1992-1-1:2004	Clause	EN 1992-1-1:2023	Clause
Angle θ	$1 \le \cot\theta \le 2{,}5$	(6.7N)	$1 \le \cot\theta \le \cot\theta_{\min}$	(8.41)
Shear reinforcement contribution	$V_{\mathrm{Rd,s}} = \dfrac{A_{\mathrm{sw}}}{s} z f_{\mathrm{ywd}} \cot\theta$	(6.8)	$\tau_{\mathrm{Rd,sy}} = \rho_{\mathrm{w}} f_{\mathrm{ywd}} \cot\theta$	(8.42)
Shear reinforcement ratio	Implicit through A_{sw}/s	–	$\rho_{\mathrm{w}} = \dfrac{A_{\mathrm{sw}}}{b_{\mathrm{w}} s}$	(8.43)
Strut check	$V_{\mathrm{Rd,max}} = \dfrac{\alpha_{\mathrm{cw}} b_{\mathrm{w}} z \nu_1 f_{\mathrm{cd}}}{\cot\theta + \tan\theta}$	(6.9)	$\sigma_{\mathrm{cd}} = \tau_{\mathrm{Ed}}(\cot\theta + \tan\theta) \le \nu f_{\mathrm{cd}}$	(8.44)
Simplified ν_1 or ν	$\nu_1 = 0{,}6(1 - f_{\mathrm{ck}}/250)$	(6.6N)	$\nu = 0{,}5$	8.2.3(6)
Refined ν_1 or ν	please read *Notes*	–	$\nu = \dfrac{1}{1 + 110\,[\varepsilon_{\mathrm{x}} + (\varepsilon_{\mathrm{x}} + 0{,}001)\cot^2\theta]} \le 1{,}0$	(8.45)
Additional tensile force due to shear	$\Delta F_{\mathrm{td}} = 0{,}5 V_{\mathrm{Ed}}(\cot\theta - \cot\alpha)$	(6.18)	$N_{\mathrm{Vd}} = \lvert V_{\mathrm{Ed}}\rvert \cot\theta$	(8.50)
Chord forces	Implicit note on longitudinal tensile force	6.2.1(7), 6.2.3(7)	$F_{\mathrm{td}} = \dfrac{M_{\mathrm{Ed}}}{z} + \dfrac{N_{\mathrm{Vd}} + N_{\mathrm{Ed}}}{2}$ $F_{\mathrm{cd}} = \dfrac{M_{\mathrm{Ed}}}{z} - \dfrac{N_{\mathrm{Vd}} + N_{\mathrm{Ed}}}{2}$	(8.51), (8.52)
Upper limit for tension chord at supports	$\dfrac{M_{\mathrm{Ed}}}{z} + \Delta F_{\mathrm{td}} \le \dfrac{M_{\mathrm{Ed,max}}}{z}$	6.2.3(7)	$F_{\mathrm{td}} \le \dfrac{M_{\mathrm{Ed,max}}}{z} + \dfrac{N_{\mathrm{Ed}}}{2}$	(8.53)

Notes: In EC2:2004, for low shear-reinforcement stress, special note values are given in (6.10.aN) and (6.10.bN) for ν; α_{cw} follows the recommended values in (6.11.aN) to (6.11.cN). In EC2:2023, $\cot\theta_{\min}$ depends on ductility class and axial-force state; for ductility class A, the limit is reduced by 20%.

Vietnamese-German University

Table A3: Comparison of members with shear reinforcement in EC2:2004 and EC2:2023 (Inclined)

Verification item	**EN 1992-1-1:2004**	**Clause**	**EN 1992-1-1:2023**	**Clause**
Angle θ	$1{,}0 \le \cot\theta \le 2{,}5$	(6.7N)	$\tan\left(\frac{\alpha_w}{2}\right) \le \cot\theta \le \cot\theta_{min}$	(8.58)
Inclined shear reinforcement contribution	$V_{Rd,s} = \frac{A_{sw}}{s} z f_{ywd} (\cot\theta + \cot\alpha)\sin\alpha$	(6.13)	$\tau_{Rd,sy} = \rho_w f_{ywd} (\cot\theta + \cot\alpha_w)\sin\alpha_w$	(8.59)
Strut check	$V_{Rd,max} = \alpha_{cw} b_w z \nu_1 f_{cd} \frac{\cot\theta + \cot\alpha}{1 + \cot^2\theta}$	(6.14)	$\sigma_{cd} = \tau_{Ed} \frac{1 + \cot^2\theta}{\cot\theta + \cot\alpha_w} \le \nu f_{cd}$	(8.60)
Additional tensile force due to shear	$\Delta F_{td} = 0{,}5 V_{Ed}(\cot\theta - \cot\alpha)$	(6.18)	$N_{Vd} = \lvert V_{Ed}\rvert(\cot\theta - \cot\alpha_w)$	(8.61)
Near-support check	$V_{Ed} \le A_{sw} f_{ywd} \sin\alpha$	(6.19)	$\tau_{Rd} = \nu f_{cd} \frac{\cot\theta - \cot\beta_{incl}}{1 + \cot^2\theta} + \rho_w f_{ywd}(\cot\beta_{incl} + \cot\alpha_w)\sin\alpha_w \le \nu f_{cd} \frac{\cot\theta + \cot\alpha_w}{1 + \cot^2\theta}$	(8.62)

Notes: In EC2:2004, inclined shear reinforcement is treated within the force-based truss model. In EC2:2023, the same case is reformulated in stress form. For EC2:2023, angles $\alpha_w > 90^\circ$ should be avoided. Compression-field inclinations with $\cot\theta < \tan(\alpha_w/2)$ are only permitted when f_{ywd} is replaced by σ_{swd} according to EN 1992-1-1:2023, Eq.(8.63).

Vietnamese-German University

Table A4: Comparison of general punching shear verification, control perimeter, and design stress in EC2:2004 and EC2:2023

Verification item	**EN 1992-1-1:2004**	**Clause**	**EN 1992-1-1:2023**	**Clause**
General verification procedure	No punching reinforcement if $v_{Ed} \leq v_{Rd,c}$ Check $v_{Ed} \leq v_{Rd,max}$ at the column perimeter Otherwise, provide punching shear reinforcement $v_{Ed} \leq v_{Rd,max}$	6.4.3(2)	Detailed verification may be omitted if $\tau_{Ed} \leq \tau_{Rd,c,min}$ Punching reinforcement may be omitted if $\tau_{Ed} \leq \tau_{Rd,c}$ Otherwise: provide reinforcement and verify $\tau_{Ed} \leq \tau_{Rd,cs}$ $\tau_{Ed} \leq \tau_{Rd,max}$	(8.87)–(8.90)
Basic control perimeter	$u_1 = 2d$	6.4.2(1)	$b_{0,5} = 0{,}5\,d_v$	8.4.2(2)
Effective depth	$d_{eff} = \frac{d_y + d_z}{2}$	(6.32)	$d_v = \frac{d_{v,x} + d_{v,y}}{2}$	(8.91)
Design punching shear stress	$v_{Ed} = \beta \frac{V_{Ed}}{u_i d}$	(6.38)	$\tau_{Ed} = \beta_e \frac{V_{Ed}}{b_{0,5} d_v}$	(8.92)
Approximate β	internal column: $\beta = 1{,}15$ edge column: $\beta = 1{,}4$ corner column: $\beta = 1{,}5$	Fig. 6.21N	internal column: $\beta_e = 1{,}15$ edge column: $\beta_e = 1{,}4$ corner column: $\beta_e = 1{,}5$ wall end: $\beta_e = 1{,}4$ wall corner: $\beta_e = 1{,}2$	Table 8.3
Refined β	$\beta = 1 + k \frac{M_{Ed}}{V_{Ed}} \frac{u_1}{W_1}$	(6.39), (6.42)–(6.46)	$\beta_e = 1 + 1{,}1 \frac{e_b}{b_b} \geq 1{,}05$	Table 8.3
	Inner column: $\beta = 1 + 1.8\sqrt{\left(\frac{e_y}{b_z}\right)^2 + \left(\frac{e_z}{b_y}\right)^2}$	(6.43)	with $e_b = \sqrt{e_{b,x}^2 + e_{b,y}^2}$	Table 8.3
	Edge column: $\beta = \frac{u_1}{u_1^*} + k \frac{u_1}{W_1} e_{par}$	(6.44)	with $e_b = 0{,}5\lvert e_{b,x}\rvert + \lvert e_{b,y}\rvert$	Table 8.3
	. Corner column with eccentricity , otherwise (6.39) applies: $\beta = \frac{u_1}{u_1^*}$	(6.46)	with $e_b = 0{,}27\left(\lvert e_{b,x}\rvert + \lvert e_{b,y}\rvert\right)$	Table 8.3

Vietnamese-German University

Table A5: Comparison of punching shear resistance without shear reinforcement in EC2:2004 and EC2:2023

Verification item	**EN 1992-1-1:2004**	**Clause**	**EN 1992-1-1:2023**	**Clause**
Punching resistance of concrete members	$v_{\mathrm{Rd,c}} = C_{\mathrm{Rd,c}} k (100 \rho_{\mathrm{l}} f_{\mathrm{ck}})^{1/3} + k_1 \sigma_{\mathrm{cp}} \geq (v_{\mathrm{min}} + k_1 \sigma_{\mathrm{cp}})$	(6.47)	$\tau_{\mathrm{Rd,c}} = \frac{0{,}6}{\gamma_{\mathrm{v}}} k_{\mathrm{pb}} \left(100 \rho_{\mathrm{l}} f_{\mathrm{ck}} \frac{d_{\mathrm{dg}}}{d_{\mathrm{v}}} \right)^{1/3} \leq \frac{0{,}5}{\gamma_{\mathrm{v}}} \sqrt{f_{\mathrm{ck}}}$	(8.94)
Reinforcement ratio	$\rho_{\mathrm{l}} = \sqrt{\rho_{\mathrm{l,y}} \rho_{\mathrm{l,z}}} \leq 0{,}02$	(6.47)	$\rho_{\mathrm{l}} = \sqrt{\rho_{\mathrm{l,x}} \rho_{\mathrm{l,y}}}$	(8.95)
Effective width for flexural reinforcement ratio	Mean values over slab width equal to column width plus $3d$ on each side	6.4.4(1)	Mean values over width b_s as defined in Fig. 8.22	8.4.3(1)
Punching shear gradient enhancement	Not explicit in the same form	–	$1{,}0 \leq k_{\mathrm{pb}} = 3{,}6 \sqrt{1 - \frac{b_0}{b_{0,5}}} \leq 2{,}5$	(8.96)
Short span / contraflexure refinement	Foundation-specific reduction inside the control perimeter and variable resistance with a	(6.48)–(6.51)	$a_{\mathrm{pd}} = \sqrt{\frac{a_{\mathrm{v}} d_{\mathrm{v}}}{8}}$	(8.97)
Contraflexure distance parameter	Not written in the same way	–	$8 d_{\mathrm{v}} \geq a_{\mathrm{p}} = \sqrt{a_{\mathrm{p,x}} a_{\mathrm{p,y}}} \geq d_{\mathrm{v}}$	(8.98)

Vietnamese-German University

Table A6: Comparison of punching shear resistance with shear reinforcement in EC2:2004 and EC2:2023

Verification item	EN 1992-1-1:2004	Clause	EN 1992-1-1:2023	Clause
Punching resistance with shear reinforcement	$v_{\mathrm{Rd,cs}} = 0{,}75\, v_{\mathrm{Rd,c}} + 1{,}5 \left(\frac{d}{s_\mathrm{r}}\right) \frac{A_\mathrm{sw} f_\mathrm{ywd,ef}}{u_1 d} \sin\alpha$	(6.52)	$\tau_{\mathrm{Rd,cs}} = \eta_\mathrm{c}\tau_{\mathrm{Rd,c}} + \eta_\mathrm{s}\rho_\mathrm{w} f_\mathrm{ywd} \geq \rho_\mathrm{w} f_\mathrm{ywd}$	(8.104)
Concrete contribution reduction factor	Implicit through $0{,}75\, v_{\mathrm{Rd,c}}$	(6.52)	$\eta_c = \frac{\tau_{\mathrm{Rd,c}}}{\tau_{\mathrm{Ed}}}$	(8.105)
Reinforcement effectiveness coefficient	Not explicit in the same form	–	$\eta_s = \frac{d_\mathrm{v}}{150\phi_\mathrm{w}} + \left(15\frac{d_\mathrm{dg}}{d_\mathrm{v}}\right)^{1/2} \left(\frac{1}{\eta_\mathrm{c}\, k_\mathrm{pb}}\right)^{3/2} \leq 0{,}8$	(8.106)
Shear reinforcement ratio	Implicit through A_sw and s_r	(6.52)	$\rho_\mathrm{w} = \frac{A_\mathrm{sw}}{s_\mathrm{r} s_\mathrm{t}}$	(8.107)
Effective design strength of punching reinforcement	$f_\mathrm{ywd,ef} = 250 + 0{,}25d \leq f_\mathrm{ywd}$	6.4.5(1)	f_ywd used directly in (8.104)	(8.104)
Inclined punching reinforcement	$\sin\alpha$ appears directly in (6.52)	(6.52)	$\rho_\mathrm{w} = A_\mathrm{sw}(\sin\alpha_\mathrm{w} + \cos\alpha_\mathrm{w})/(s_\mathrm{r} s_\mathrm{t})$ for distributed reinforcement $\rho_\mathrm{w} = A_\mathrm{sw}\sin\alpha_\mathrm{w}/(d_\mathrm{v} s_\mathrm{t})$ for single bent-up bars	8.4.4(2)
Maximum resistance	$v_\mathrm{Ed} = \beta\frac{V_\mathrm{Ed}}{u_0 d} \leq v_{\mathrm{Rd,max}}$	(6.53)	$\tau_{\mathrm{Rd,max}} = \eta_\mathrm{sys}\tau_{\mathrm{Rd,c}}$	(8.109)
System factor for studs	Not explicit in same form	–	$\eta_\mathrm{sys} = 0{,}70 + 0{,}63\left(\frac{b_0}{d_\mathrm{v}}\right)^{1/4} \geq 1{,}0$	(8.110)
System factor for links / stirrups	Not explicit in same form	–	$\eta_\mathrm{sys} = 0{,}50 + 0{,}63\left(\frac{b_0}{d_\mathrm{v}}\right)^{1/4} \geq 1{,}0$	(8.111)
Outer perimeter where reinforcement is no longer required	$u_\mathrm{out,ef} = \frac{\beta V_\mathrm{Ed}}{v_{\mathrm{Rd,c}} d}$	(6.54)	$b_{0,5,\mathrm{out}} = b_{0,5}\left(\frac{d_\mathrm{v}}{d_\mathrm{v,out}} \cdot \frac{1}{\eta_\mathrm{c}}\right)^2$	(8.112)
Effective depth of outer reinforcement perimeter	Not written separately	–	$d_{v,\mathrm{out}} = \frac{d_\mathrm{x} + d_\mathrm{y}}{2} - c_\mathrm{v}$	(8.108)
Outermost reinforcement location	Outermost perimeter should be placed not greater than $1{,}5d$ within u_out or $u_\mathrm{out,ef}$	6.4.5(4)	Outermost perimeter should be placed not greater than $0{,}5d_{v,\mathrm{out}}$ from $b_{0,5,\mathrm{out}}$	8.4.4(7)

Vietnamese-German University

B. Calculations

B.1 Shear Worked Example

Worked Example: Simply-supported Beam

This worked example illustrates the shear verification of a simply-supported reinforced concrete beam according to EN 1992-1-1:2023.

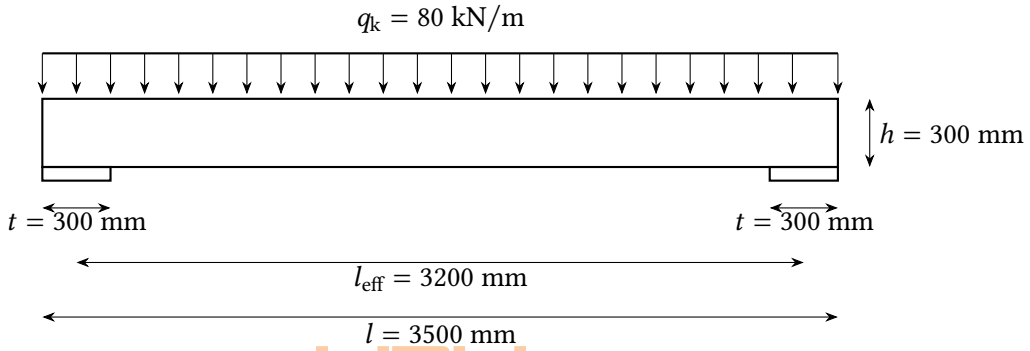

Figure B1: Geometry and loading of the simply-supported beam used in the worked example

VGU
Vietnamese-German University

Given Data

Table B1: Given data for the simply-supported beam

Parameter	Symbol	Value
Beam width	b_w	300 mm
Overall depth	h	300 mm
Effective depth	d	260 mm
Support width	t	300 mm
Total length	l	3500 mm
Effective span	l_{eff}	3200 mm
Concrete strength class	–	C30/37
Characteristic steel yield strength	f_{yk}	500 MPa
Permanent load	g_k	self-weight
Live load	q_k	80 kN/m

A) Load actions and forces

Permanent load:
The beam self-weight is

$$g_k = b_w \cdot h \cdot \gamma_c = 0{,}30 \cdot 0{,}30 \cdot 25 = 2{,}25 \text{ kN/m}$$

The design value of the permanent load is

$$g_d = 1{,}35 \cdot g_k = 1{,}35 \cdot 2{,}25 = 3{,}04 \text{ kN/m}$$

Live load:
The design value of the live load is

$$q_d = 1{,}50 \cdot q_k = 1{,}50 \cdot 80 = 120{,}0 \text{ kN/m}$$

Resulting design actions:
Hence, the total design line load is

$$w_{Ed} = g_d + q_d = 3{,}04 + 120{,}0 = 123{,}04 \text{ kN/m}$$

VGU
Vietnamese-German University

For a simply-supported beam under a uniformly distributed load,

$$M_{Ed,max} = \frac{w_{Ed} l_{eff}^2}{8} = \frac{123{,}04 \cdot 3{,}20^2}{8} = 157{,}49 \text{ kNm}$$

$$V_{Ed} = \frac{w_{Ed} l_{eff}}{2} = \frac{123{,}04 \cdot 3{,}20}{2} = 196{,}86 \text{ kN}$$

B) Bending design with ω-method

According to EC2:2023, the design compressive strength of concrete can be calculated using Equation (5.2) and Equation (5.3):

$$f_{cd} = \eta_{cc} \cdot k_{tc} \cdot \frac{f_{ck}}{\gamma_c} = 1{,}0 \cdot 1{,}0 \cdot \frac{30}{1{,}5} = 20{,}0 \text{ MPa}$$

with

$$\eta_{cc} = \left(\frac{f_{ck,ref}}{f_{ck}}\right)^{1/3} \leq 1{,}0 = \frac{40}{30}^{1/3} = 1{,}1 \geq 1{,}0$$

$$\Rightarrow \eta_{cc} = 1{,}0$$

The selected longitudinal reinforcement to be used is B500:

$$f_{yd} = \frac{f_{yk}}{\gamma_s} = \frac{500}{1{,}15} = 435 \text{ MPa}$$

The dimensionless design moment is

$$\mu_{\text{Ed}} = \frac{M_{\text{Ed,max}}}{b_{\text{w}} d^2 f_{\text{cd}}} = \frac{157{,}49 \cdot 10^6}{300 \cdot 260^2 \cdot 20{,}0} = 0{,}389$$

From Schneider Bautabellen, the interpolated value ω is

$$\omega = 0{,}537$$

Hence, the required longitudinal reinforcement is

$$A_{\text{sl,req}} = \omega \cdot \frac{b_{\text{w}} d f_{\text{cd}}}{f_{\text{yd}}} = 0{,}537 \cdot \frac{300 \cdot 260 \cdot 20{,}0}{434{,}8} = 19{,}27 \text{ cm}^2$$

Thus, the selected longitudinal reinforcement is $4\phi25$:

$$A_{\text{sl,provided}} = 19{,}63 \text{ cm}^2 \geq A_{\text{sl,req}} = 19{,}27 \text{ cm}^2$$

Hence, the longitudinal reinforcement ratio used in the shear model is

$$\rho_{\text{l}} = \frac{A_{\text{sl}}}{b_{\text{w}} d} = \frac{1963}{300 \cdot 260} = 0{,}0252$$

VGU
Vietnamese-German University

C) Design value of shear stress

The verification section is taken at a distance d from the face of the support. Measured from the support centerline, this gives

$$x = \frac{t}{2} + d = 0{,}15 + 0{,}26 = 0{,}41 \text{ m}$$

The design shear force at the verification section is therefore

$$V_{\text{Ed}}^* = V_{\text{Ed}} - w_{\text{Ed}} x = 196{,}86 - 123{,}04 \cdot 0{,}41 = 146{,}41 \text{ kN}$$

In EC2:2023, the verification is carried out in stress form. Therefore, the design shear stress is

$$\tau_{\text{Ed}} = \frac{V_{\text{Ed}}^*}{b_{\text{w}} z} = \frac{146{,}41 \cdot 10^3}{300 \cdot 0{,}9 \cdot 260} = 2{,}086 \text{ MPa}$$

D) Check of concrete shear resistance without shear reinforcement

Using Equation (3.22), the minimum shear stress resistance of the concrete beam is

$$\tau_{\text{Rd,c,min}} = \frac{11}{\gamma_{\text{v}}} \cdot \sqrt{\frac{f_{\text{ck}}}{f_{\text{yd}}} \cdot \frac{d_{\text{dg}}}{d}} = \frac{11}{1{,}4} \cdot \sqrt{\frac{30}{435} \cdot \frac{40}{260}} = 0{,}809 \text{ MPa}$$

Using Equation (3.23), the shear stress resistance of the concrete beam without shear reinforcement is

$$\tau_{\mathrm{Rd,c}} = \frac{0{,}66}{\gamma_{\mathrm{v}}} \cdot \left(100 \cdot \rho_{\mathrm{l}} \cdot f_{\mathrm{ck}} \cdot \frac{d_{\mathrm{dg}}}{d}\right)^{1/3} = \frac{0{,}66}{1{,}4} \cdot \left(100 \cdot 0{,}0252 \cdot 30 \cdot \frac{40}{268}\right)^{1/3} = 1{,}068 \text{ MPa}$$

Therefore, the governing resistance without shear reinforcement is

$$\tau_{\mathrm{Rd,c,gov}} = \max(\tau_{\mathrm{Rdc,min}}, \tau_{\mathrm{Rd,c}}) = 1{,}068 \text{ MPa}$$

$$\Rightarrow \tau_{\mathrm{Ed}} = 2{,}086 \text{ MPa} > \tau_{\mathrm{Rd,c,gov}} = 1{,}068 \text{ MPa}$$

$\Rightarrow$ The concrete alone is not sufficient, thus shear reinforcement is required.

E) Provided shear reinforcement

According to EN 1992-1-1:2023, 8.2.3(4), for ordinary reinforced members without axial force and reinforcement with ductility class B, the limitation of angle θ is

$$1{,}0 \leq \cot\theta \leq 2{,}5$$

For simplification, $\cot\theta = 1{,}2$ is used, which lies in the permitted range. Using Equation (3.27), the shear resistance required of the concrete beam for vertical shear reinforcement is

VGU
Vietnamese-German University

$$\tau_{\mathrm{Rd,sy}} = \rho_{\mathrm{w}} \cdot f_{\mathrm{ywd}} \cdot \cot\theta \quad \text{with} \quad \rho_{\mathrm{w}} = \frac{A_{\mathrm{sw}}}{s \cdot b_{\mathrm{w}}}$$

$$\Rightarrow a_{\mathrm{sw}} = \frac{A_{\mathrm{sw}}}{s} = \frac{\tau_{\mathrm{Ed}} \cdot b_{\mathrm{w}}}{f_{\mathrm{ywd}} \cdot \cot\theta} = \frac{2{,}086 \cdot 0{,}3}{435 \cdot 1{,}2} \cdot 10^4 = 11{,}99 \text{ cm}^2/\text{m}$$

Thus, the stirrup arrangement of two-legged $\phi 10/12{,}5$ is selected.The area of one stirrup is

$$A_{\mathrm{sw}} = 2 \cdot \frac{\pi \cdot 10^2}{4} = 157{,}1 \text{ mm}^2$$

The provided reinforcement per unit length is

$$\frac{A_{\mathrm{sw}}}{s} = \frac{157{,}1}{125} = 1{,}257 \text{ mm}^2/\text{mm} = 12{,}57 \text{ cm}^2/\text{m}$$

$$\Rightarrow a_{\mathrm{sw,provided}} = 12{,}57 \text{ cm}^2/\text{m} \geq a_{\mathrm{sw,req}} = 11{,}99 \text{ cm}^2/\text{m}$$

Using Equation (3.27), the corresponding shear resistance with shear reinforcement is

$$\tau_{\mathrm{Rd,sy}} = \rho_{\mathrm{w}} \cdot f_{\mathrm{ywd}} \cdot \cot\theta = \frac{157{,}1}{125 \cdot 300} \cdot 435 \cdot 1{,}2 = 2{,}187 \text{ MPa}$$

$$\Rightarrow \tau_{\mathrm{Ed}} = 2{,}086 \text{ MPa} < \tau_{\mathrm{Rd,sy}} = 2{,}187 \text{ MPa}$$

$$\Rightarrow \text{The shear reinforcement is sufficient.}$$

F) Check of maximum shear resistance

The maximum shear resistance is checked by limiting the stress in the compression field:

$$\sigma_{cd} = \tau_{Ed}\,(\cot\theta + \tan\theta) \leq \nu\, f_{cd}$$

For the selected angle θ with

$$\cot\theta = 1{,}2 \qquad \Rightarrow \qquad \tan\theta = \frac{1}{1{,}2} = 0{,}833$$

the maximum design shear stress resistance is

$$\tau_{Rd,max} = \frac{\nu\, f_{cd}}{\cot\theta + \tan\theta} = \frac{0{,}5 \cdot 20}{1{,}2 + 0{,}833} = 4{,}92 \text{ MPa}$$

Hence,

$$\tau_{Ed} = 2{,}086 \text{ MPa} < \tau_{Rd,max} = 4{,}92 \text{ MPa}$$

Therefore, the maximum shear resistance is satisfied.
Equivalently, the compression field stress is

$$\sigma_{cd} = \tau_{Ed}(\cot\theta + \tan\theta) = 2{,}086(1{,}2 + 0{,}833) = 4{,}24 \text{ MPa} \leq \nu\, f_{cd} = 0{,}5 \cdot 20 = 10{,}0 \text{ MPa}$$

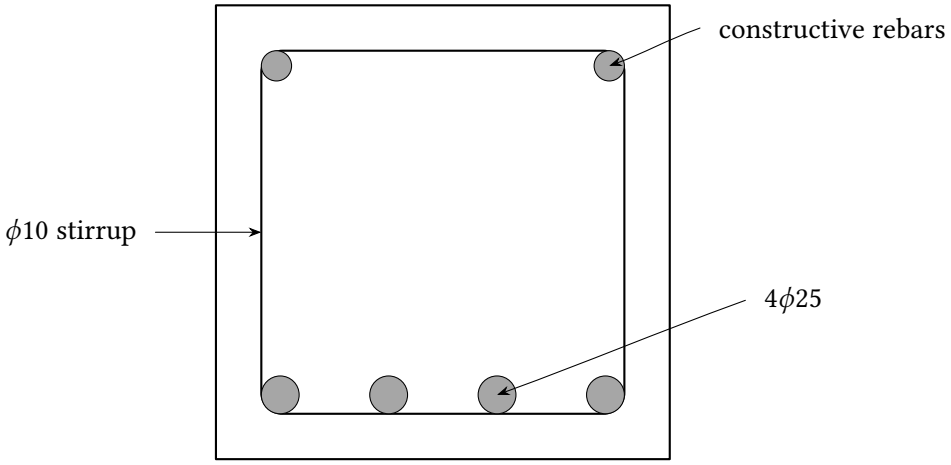

Figure B2: Schematic reinforcement layout of the RC beam section used in the worked example

B.2 Punching Shear Worked Example

This worked example illustrates the punching shear verification of a flat slab at an inner column according to EN 1992-1-1:2023.

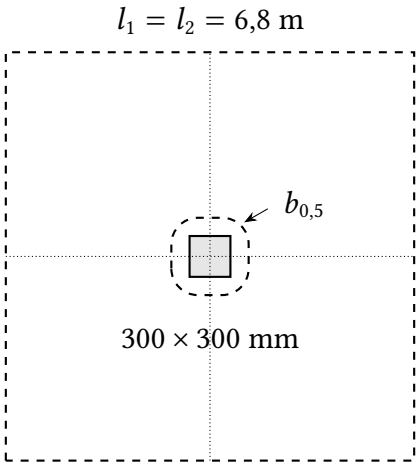

Figure B3: Plan view of the internal column and the control perimeter $b_{0,5}$ used in the punching verification

Given Data

VGU
Vietnamese-German University

Table B2: Given data for the punching shear example

Parameter	Symbol	Value
Slab thickness	t	300 mm
Span in x-direction	l_1	6,8 m
Span in y-direction	l_2	6,8 m
Column size	$c_1 = c_2$	300 mm
Concrete cover	c_v	20 mm
Design column force	N_{Ed}	900 kN
Concrete strength class	–	C30/37
Steel grade	–	B500
Provided slab reinforcement in x direction $\phi 12/100$	$A_{s,x}$	11,3 cm^2/m
Provided slab reinforcement in y direction $\phi 12/100$	$A_{s,y}$	11,3 cm^2/m

A) Material properties

For concrete C30/37, using Equation (5.2) and Equation (5.3), the compressive design strength of concrete is

$$f_{cd} = \frac{k_{tc}\,\eta_{cc}\,f_{ck}}{\gamma_c} = \frac{1{,}0 \cdot 1{,}0 \cdot 30}{1{,}5} = 20{,}0 \text{ MPa}$$

For B500, the design yield strength of reinforcement is

$$f_{yd} = \frac{f_{yk}}{\gamma_s} = \frac{500}{1{,}15} = 435 \text{ MPa}$$

B) Shear-resisting effective depth and control perimeter

From the slab detailing, $d_{v,x}$ and $d_{v,y}$ are calculated as follows with the assumption of case a) direct support

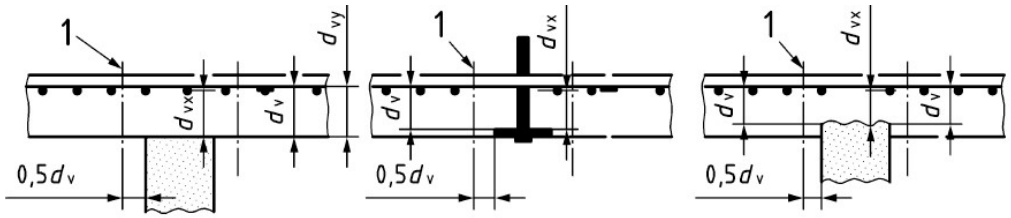

a) direct support b) hanging support with penetration c) penetration by direct support

VGU
Vietnamese-German University

$$d_{v,x} = 274 \text{ mm} \quad \text{and} \quad d_{v,y} = 262 \text{ mm}$$

Using Equation (4.15),

$$d_v = \frac{d_{v,x} + d_{v,y}}{2} = \frac{274 + 262}{2} = 268 \text{ mm} = 0{,}268 \text{ m}$$

For an internal square column, the control perimeter at a distance $0{,}5d_v$ from the column face is

$$b_{0,5} = 2(c_1 + c_2) + 2\pi 0{,}5 d_v = 2(0{,}3 + 0{,}3) + \pi \cdot 0{,}268 = 2{,}042 \text{ m}$$

The perimeter of the column b_0 is

$$b_0 = 2(c_1 + c_2) = 2(0{,}3 + 0{,}3) = 1{,}2 \text{ m}$$

For the internal column, the approximated coefficient from Table 8.3 is

$$\beta_e = 1{,}15$$

C) Design punching shear stress

The design punching shear stress at the control perimeter is

$$\tau_{\mathrm{Ed}} = \beta_e \frac{V_{\mathrm{Ed}}}{b_{0,5} d_{\mathrm{v}}} = 1{,}15 \cdot \frac{900/1000}{2{,}042 \cdot 0{,}268} = 1{,}891 \text{ MPa}$$

D) Punching resistance without shear reinforcement

Using Equation (4.19), the punching shear stress resistance without shear reinforcement is

$$\tau_{\mathrm{Rd,c}} = \frac{0{,}6}{\gamma_{\mathrm{v}}} \cdot k_{\mathrm{pb}} \left(100 \cdot \rho_{\mathrm{l}} \cdot f_{\mathrm{ck}} \cdot \frac{d_{\mathrm{dg}}}{d_{\mathrm{v}}} \right)^{1/3} \leq \frac{0{,}5}{\gamma_{\mathrm{v}}} \cdot \sqrt{f_{\mathrm{ck}}}$$

$$= \frac{0{,}6}{1{,}4} \cdot 2{,}312 \left(100 \cdot 0{,}00422 \cdot 30 \cdot \frac{40}{268} \right)^{1/3} \leq \frac{0{,}5}{1{,}4} \cdot \sqrt{30}$$

$$= 1{,}225 \text{ MPa} \leq 1{,}95 \text{ MPa}$$

Thus,

$$\tau_{\mathrm{Ed}} = 1{,}891 \text{ MPa} > \tau_{\mathrm{Rd,c}} = 1{,}225 \text{ MPa}$$

Therefore, punching shear reinforcement is required.

VGU Vietnamese-German University

Punching shear gradient enhancement coefficient

$$1{,}0 \leq k_{\mathrm{pb}} = 3{,}6 \sqrt{1 - \frac{b_0}{b_{0,5}}} \leq 2{,}5$$

$$k_{\mathrm{pb}} = 3{,}6 \sqrt{1 - \frac{b_0}{b_{0,5}}} = 3{,}6 \sqrt{1 - \frac{1{,}20}{2{,}042}} = 2{,}312$$

Aggregate-dependent factor

$$d_{dg} = \min(16 + D_{\mathrm{lower}}, 40) = \min(16 + 32, 40) = \min(48, 40) = 40 \text{ mm}$$

Reinforcement ratio

Since the assumption that flexural reinforcement is uniform in both slab directions and extends sufficiently beyond the control perimeter, the mean reinforcement ratios over the width b_{s} may be evaluated directly from the provided reinforcement per meter width. Thus, the longitudinal reinforcement ratios in the two slab directions are

$$\rho_{\mathrm{l,x}} = \frac{11{,}3/10^4}{0{,}274 \cdot 1{,}0} = 0{,}00412$$

$$\rho_{l,y} = \frac{11{,}3/10^4}{0{,}262 \cdot 1{,}0} = 0{,}00431$$

Using Equation (4.20), the equivalent reinforcement ratio is

$$\rho_l = \sqrt{\rho_{l,x}\rho_{l,y}} = \sqrt{0{,}00412 \cdot 0{,}00431} = 0{,}00422$$

Minimum shear resistance of a concrete member

Using Equation (3.22), the minimum shear stress resistance of the concrete slab is

$$\tau_{Rd,c,min} = \frac{11}{\gamma_v} \cdot \sqrt{\frac{f_{ck}}{f_{yd}} \cdot \frac{d_{dg}}{d}} = \frac{11}{1{,}4} \cdot \sqrt{\frac{30}{435} \cdot \frac{40}{268}} = 0{,}797 \text{ MPa}$$

E) Punching shear resistance with shear reinforcement

If $\phi 10$ studs are used, the provided area of one stud leg is

$$A_{sw,provided} = \frac{\pi\phi^2}{4} = \frac{\pi \cdot 10^2}{4} = 78{,}54 \text{ mm}^2$$

The provided reinforcement ratio is then

$$\rho_{w,provided} = \frac{A_{sw,provided}}{s_r s_t}$$

VGU Vietnamese-German University

and the corresponding punching shear resistance becomes

$$\tau_{Rd,cs} = \eta_c \tau_{Rd,c} + \eta_s \rho_{w,provided} f_{ywd}$$

Finally, the reinforcement is sufficient if

$$\tau_{Ed} \leq \tau_{Rd,cs}$$

$$\tau_{Rd,cs} = \eta_c \tau_{Rd,c} + \eta_s \rho_w f_{ywd}$$

$$\tau_{Rd,cs} = 0{,}647 \cdot 1{,}225 + 0{,}8 \cdot 0{,}00362 \cdot 435$$

$$\tau_{Rd,cs} = 0{,}793 + 1{,}260 = 2{,}053 \text{ MPa}$$

$$\rho_w = \frac{A_{sw}}{s_r s_t} = \frac{78{,}54}{127{,}5 \cdot 170{,}16} = 0{,}00362$$

E) Punching shear with shear reinforcement

Since

$$\tau_{Ed} = 1{,}891 \text{ MPa} > \tau_{Rd,c} = 1{,}225 \text{ MPa}$$

punching shear reinforcement is required.

As a practical basis for the pre-selected choice of the punching shear reinforcement, the manual from Peikko PSB system is taken as reference. According to the technical manual, PSB system consists of double-headed studs welded to a mounting rail and is specifically intended for use as vertical punching shear reinforcement in slabs. Stud diameters from $\phi 10$ to $\phi 25$ are available, and the elements may be supplied as 2-stud elements, 3-stud elements, or as complete elements ([21]). For this example, a radial arrangement with 8 PSB elements around the column is used, as shown in the following figure.

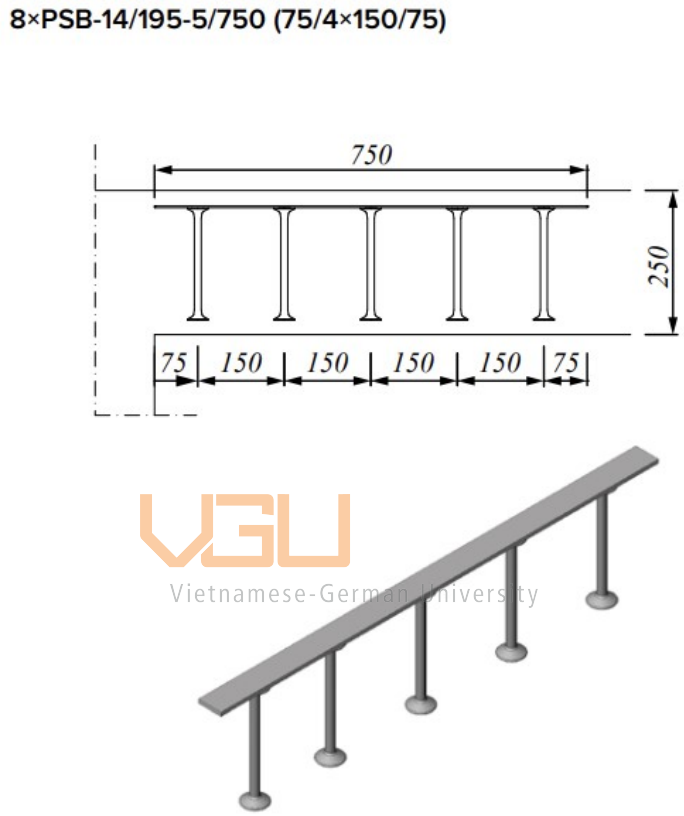

VGU
Vietnamese-German University

Figure B4: Peikko PSB System (Source: [21])

From Figure B4, the following information is made

$$s_0 = 75 \text{ mm} \qquad s_1 = 150 \text{ mm}$$

Hence, the radial spacing at the first investigated perimeter is

$$s_r = \max\left(s_0 + \frac{s_1}{2}, s_1\right) = \max\left(75 + \frac{150}{2}, 150\right) = \max(150{,}150) = 150 \text{ mm}$$

The average tangential spacing at the control perimeter is estimated from the number of stud legs arranged around the first perimeter:

$$s_t = \frac{b_{0,5}}{n} = \frac{2042}{8} = 255{,}25 \text{ mm}$$

with η_c

$$\eta_c = \frac{\tau_{Rd,c}}{\tau_{Ed}} = \frac{1{,}225}{1{,}891} = 0{,}647$$

with η_s

$$\eta_s = \frac{d_v}{150\phi_w} + \left(15\frac{d_{dg}}{d_v}\right)^{1/2}\left(\frac{1}{\eta_c k_{pb}}\right)^{3/2} \leq 0{,}8$$

$$\eta_s = \frac{268}{150 \cdot 10} + \left(15 \cdot \frac{40}{268}\right)^{1/2}\left(\frac{1}{0{,}647 \cdot 2{,}312}\right)^{3/2}$$

$$\eta_s = 0{,}179 + (2{,}239)^{1/2}\,(0{,}668)^{3/2} = 0{,}179 + 0{,}817 = 0{,}996$$

$$\Rightarrow \eta_s = 0{,}8$$

The design punching shear stress resistance with shear reinforcement is calculated according to

$$\tau_{Rd,cs} = \eta_c \tau_{Rd,c} + \eta_s \rho_w f_{ywd} \geq \rho_w f_{ywd}$$

Thus, the required reinforcement ratio is

$$\rho_{w,req} = \frac{\tau_{Ed} - \eta_c \tau_{Rd,c}}{\eta_s f_{ywd}} = \frac{1{,}891 - 0{,}647 \cdot 1{,}225}{0{,}8 \cdot 435} = 3{,}16 \cdot 10^{-3}$$

The required area of one stud leg is

$$A_{sw,req} = \rho_{w,req}\, s_r s_t = 3{,}16 \cdot 10^{-3} \cdot 150 \cdot 255{,}24 = 120{,}8 \text{ mm}^2$$

VGU Vietnamese-German University

The available stud diameters can be checked as follows:

$$A_{\phi 10} = \frac{\pi \cdot 10^2}{4} = 78{,}5 \text{ mm}^2$$

$$A_{\phi 12} = \frac{\pi \cdot 12^2}{4} = 113{,}1 \text{ mm}^2$$

$$A_{\phi 14} = \frac{\pi \cdot 14^2}{4} = 153{,}9 \text{ mm}^2$$

Thus,

$$A_{\phi 14} = 153{,}9 \text{ mm}^2 > A_{sw,req} = 120{,}8 \text{ mm}^2$$

$$\Rightarrow \phi 14 \text{double-headed studs}$$

With this choice, the provided reinforcement ratio is

$$\rho_{w,prov} = \frac{A_{sw,prov}}{s_r s_t} = \frac{153{,}9}{150 \cdot 255{,}24} = 0{,}00402$$

The punching shear resistance with shear reinforcement is

$$\tau_{\mathrm{Rd,cs}} = \eta_{\mathrm{c}}\tau_{\mathrm{Rd,c}} + \eta_{\mathrm{s}}\rho_{\mathrm{w}}f_{\mathrm{ywd}}$$

$$\tau_{\mathrm{Rd,cs}} = 0{,}647 \cdot 1{,}225 + 0{,}8 \cdot 0{,}00402 \cdot 435$$

$$\tau_{\mathrm{Rd,cs}} = 0{,}793 + 1{,}398 = 2{,}191\ \mathrm{MPa}$$

Verification:

$$\tau_{\mathrm{Ed}} = 1{,}891\ \mathrm{MPa} < \tau_{\mathrm{Rd,cs}} = 2{,}191\ \mathrm{MPa}$$

Thus, the chosen stud is sufficient. The stud chosen is an educated guess for this worked example, based on the EC2:2023 resistance check and the available product formats shown in the manufacturer's manual. Hence, the final detailing and product designation should be verified against the selected manufacturer's approved system.

F) Maximum allowable punching shear resistance

According to EC2:2023, the maximum punching shear resistance depends on the selected reinforcement system. With

$$\left(\frac{b_0}{d_{\mathrm{v}}}\right)^{1/4} = \left(\frac{1{,}20}{0{,}258}\right)^{1/4} = (4{,}478)^{1/4} \approx 1{,}45$$

Vietnamese-German University

Maximum punching shear resistance using **studs** can be calculated as follows

$$\eta_{\mathrm{sys,studs}} = 0{,}70 + 0{,}63 \cdot \left(\frac{b_0}{d_{\mathrm{v}}}\right)^{1/4} = 0{,}70 + 0{,}63 \cdot 1{,}45 = 1{,}614$$

$$\tau_{\mathrm{Rd,max,studs}} = \eta_{\mathrm{sys,studs}} \cdot \tau_{\mathrm{Rd,c}} = 1{,}62 \cdot 1{,}225 = 1{,}985\,\mathrm{MPa}$$

Maximum punching shear resistance using **links or stirrups** can be calculated as follows

$$\eta_{\mathrm{sys,links}} = 0{,}50 + 0{,}63 \cdot \left(\frac{b_0}{d_{\mathrm{v}}}\right)^{1/4} = 0{,}50 + 0{,}63 \cdot 1{,}45 = 1{,}414$$

$$\tau_{\mathrm{Rd,max,links}} = \eta_{\mathrm{sys,links}} \cdot \tau_{\mathrm{Rd,c}} = 1{,}41 \cdot 1{,}225 = 1{,}727\,\mathrm{MPa}$$

Although the calculated resistance with punching shear reinforcement is

$$\tau_{\mathrm{Rd,cs}} = 2{,}191\,\mathrm{MPa} \leq \tau_{\mathrm{Rd,max,studs}} = 1{,}985\,\mathrm{MPa}$$

the design is still limited by the maximum allowable punching shear resistance. This shows that the reinforcement contribution is not the governing upper limit. Even if the reinforcement is capable of providing a higher calculated resistance, the punching shear resistance cannot exceed the local upper-bound capacity near the support region. Therefore, the governing

condition is always

$$\tau_{Ed} \leq \min(\tau_{Rd,cs}, \tau_{Rd,max})$$

With the applied design shear stress

$$\tau_{Ed} = 1{,}891\,\text{MPa}$$

the verification becomes:

- for studs:

$$1{,}891 \leq 1{,}98\,\text{MPa} \quad \Rightarrow \quad \text{verification satisfied}$$

- for links or stirrups:

$$1{,}891 > 1{,}73\,\text{MPa} \quad \Rightarrow \quad \text{verification not satisfied}$$

In conclusion, the selected stud system is sufficient, whereas links or stirrups would not provide sufficient maximum punching shear resistance in this case.

Minimum shear reinforcement requirement

According to EN 1992-1-1:2023, in beams and slabs requiring shear or torsion reinforcement, a minimum ratio of shear reinforcement shall be provided with the assumption that shear reinforcement with ductility A will be used. The minimum shear reinforcement ratio is defined as

$$\rho_{w,min} = \frac{A_{sw,min}}{s \cdot b_w \cdot \sin\alpha} \geq 0{,}08 \cdot \frac{\sqrt{f_{ck}}}{f_{yk}} \tag{B.1}$$

$$\Rightarrow A_{sw,min} \geq 0{,}08 \cdot s \cdot b_w \cdot \sin\alpha \cdot \frac{\sqrt{f_{ck}}}{f_{yk}}$$

For the common case of vertical stirrups, $\alpha = 90^\circ$ and therefore $\sin\alpha = 1$. This simplifies to

$$A_{sw,min} \geq 0.08 \cdot s \cdot b_w \cdot \frac{\sqrt{f_{ck}}}{f_{yk}} = 0{,}08 \cdot 150 \cdot 300 \cdot \frac{\sqrt{30}}{500} = 39{,}44\ \text{mm}^2$$

B.3 Shear and Punching Calculations (EN 1992-1-1: 2004)

VGU
Vietnamese-German University

SIMPLY-SUPPORTED BEAM

A. MATERIAL PROPERTIES

Concrete grade		C30/37		
Characteristic compressive strength of concrete	f_{ck}	30	N/mm²	
Concrete modulus of elasticity	$E_{cm} * 10^{-3}$	33	GPa	
Partial safety factor of concrete	γ_c	1.5	-	
Coefficient that account for long-term effects and unfavorable effects	α	1.00	-	
Design compressive strength of concrete	f_{cd}	20	N/mm²	*EN 1992-1-1:2004 Eq. (3.15)
Steel grade		B500		
Characteristic yield strength of steel	f_{yk}	500	N/mm²	
Steel modulus of elasticity	E_s	200	GPa	
Partial safety factor of steel	γ_s	1.15	-	
Design yield strength of steel	f_{yd}	435	N/mm²	

B. GEOMETRY OF CROSS SECTION

Width of cross-section	b	0.3	m
Height of cross-section	h	0.3	m
Width of support	t	0.3	m
Length of beam	l	3.5	m
Effective length of beam	l_{eff}	3.2	m

C. LOAD ACTION, SAFETY CONCEPT AND FORCES

C1. Dead Load

Self-weight of concrete member	$g_{1,k}$	2.3	kN/m
Design dead load	$g_{1,d}$	3.0	kN/m

Vietnamese-German University

C2. Live Load

Live load	q_k	80.0	kN/m
Design live load	q_d	120.0	kN/m

C3. Internal forces

Design value of moment	M_{Ed}	157.5	kNm			
Design value of shear force	V_{Ed}	196.9	kN			
Reduced value of designed shear force	V_{Ed*}	146.4	kN	→	τ_{Ed}	**2.086 MPa**

D. CONCRETE COVER

		top	bottom	
Exposure class		XC1	XC1	
Minimum concrete grade		C16/20	C16/20	
Allowance for deviation	c_{dev}	10		mm
Pre-selected main rebar	$d_{s,2}$	20	20	mm
Minimum cover of main rebar	$c_{min,2}$	20	20	mm
Nominal cover of main rebar	$c_{nom,2}$	30	30	mm
Pre-selected stirrup	$d_{s,1}$	10		mm
Minimum cover of stirrup	$c_{min,1}$	10		mm
Nominal cover of stirrup	$c_{nom,1}$	20		mm
Chosen concrete cover	c_v	20	20	mm

Distance from the face of member to the centre of longitudinal reinforcement	d_1	4		cm
Static depth from the outermost fibre of compression zone to the center of rebars	d	0.26		m
Allowance of crack width	w_{max}	0.4		mm

E. BENDING DESIGN USING ω - METHOD

Design value of moment	M_{Ed}	0.157	MNm
Width of cross section	b	0.30	m
Static depth from the outermost fibre of compression zone to the center of rebars	d	0.260	m
Design compressive strength of concrete	f_{cd}	20	N/mm²
Design yield strength of steel	f_{yd}	435	N/mm²
	u_{Eds}	0.389	-
	ω	0.537	-
Amount of flexural reinforcement required	$A_{s1,req}$	19.28	cm²
Selection of longitudinal rebars	4φ25	19.63	cm²

F. SHEAR ACCORDING TO EN 1992-1-1:2004 CLAUSE 6.2

F1. Shear resistance of member without shear reinforcement

F1a. Minimum shear resistance of concrete	**$V_{Rd,c,min}$**	**38.5**	**kN**	→	**$\tau_{Rdc,min}$**	**0.548**	**MPa**
Minimum shear stress	v_{min}	0.493	N/mm²				
	0,0525 / γ_c	0.035	-				
Size factor	k	1.9	-				

VGU Vietnamese-German University

F1b. Shear resistance of concrete	**$V_{Rd,c}$**	**73.3**	**kN**	→	**$\tau_{Rd,c}$**	**1.044**	**MPa**
	0,18 / γ_c	0.12	-				
Flexural reinforcement ratio	ρ_l	0.0200	-				
Factor	k_1	0.12	-				
Axial stress	σ_{cp}	0.0	-				

→ **73 < 146: Shear reinforcement needed**

F2. Shear resistance of member with shear reinforcement

Limitation of strut angle	**cotθ**	**1.2**		**cotθ**	**2.5**	
Angle of the concrete compression strut	θ	39.8		θ	21.8	
Shear reinforcement per unit length	**a_{sw}**	**11.99**	cm²/m	**a_{sw}**	**5.76**	cm²/m
Selection of stirrups	2 legs φ10/12,5	12.56	cm²/m	2 legs φ8/15	6.70	cm²/m
Utilization rate		1.0			1.2	

F3. Minimum required shear reinforcement	**a_{sw}**	**2.6**	**cm²/m**	*EN 1992-1-1:2004, Clause 9.2.2(5)
Width of member	b_w	0.3	m	
Angle of stirrup placement	sinα	1.0	-	*assumed using vertical stirrups, thus α = 90°
Shear reinforcement ratio	$\rho_{w,min}$	0.0015	-	
Tensile strength of concrete	f_{ctm}	2.9	N/mm²	
Characteristic yield strength of steel	f_{yk}	500	N/mm²	

F4. Check of concrete strut

Maximum shear resistance of concrete st	$V_{Rd,max}$	**364.6**	**kN**	→	τ_{Rdmax}	**5.193**	**MPa**

Vrd,max = 364,6 kN > Ved = 196,9 kN

Legend
Input values
Self-generated values
Output values

VGU
Vietnamese-German University

AT INNER COLUMN

A. MATERIAL PROPERTIES

Concrete grade		C30/37		
Characteristic compressive strength of concrete	f_{ck}	30	MPa	
Concrete modulus of elasticity	$E_{cm} * 10^{-3}$	33	GPa	
Partial safety factor of concrete	γ_c	1.5	-	
Coefficient that account for long-term effects and unfavorable effects	α	1.0	-	
Design compressive strength of concrete	f_{cd}	20	MPa	*EN 1992-1-1:2004 Eq. (3.15)
Steel grade		B500A		
Characteristic yield strength of steel	f_{yk}	500	MPa	
Steel modulus of elasticity	E_s	200	GPa	
Partial safety factor of steel	γ_s	1.15	-	
Design yield strength of steel	f_{yd}	435	MPa	

B. GEOMETRY OF CROSS SECTION

Thickness of slab	t	300	mm
Length #1 of the slab	l_1	6.8	m
Length #2 of the slab	l_2	6.8	m
Column's dimension	c_1	0.30	m
	c_2	0.30	m

VGU Vietnamese-German University

C. LOAD ACTION, SAFETY CONCEPT AND FORCES

Design value of normal force	N_{Ed}	900.0	kN

D. CONCRETE COVER

		top	bottom	
Exposure class		XC1	XC1	
Minimum concrete grade		C16/20	C16/20	
Allowance for deviation	c_{dev}	10		mm
Pre-selected main rebar	$d_{s,2}$	12	12	mm
Minimum cover of main rebar	$c_{min,2}$	12	12	mm
Nominal cover of main rebar	$c_{nom,2}$	22	22	mm
Pre-selected stirrup	$d_{s,1}$	10		mm
Minimum cover of stirrup	$c_{min,1}$	10		mm
Nominal cover of stirrup	$c_{nom,1}$	20		mm
Concrete cover	c_v	20	20	mm
Chosen concrete cover	c_v	20	20	mm
	d_1	36		mm
Static depth from the outermost fibre of compression zone to the center of rebars	d	264.0		mm
Allowance of crack width	w_{max}	0.4		mm

G MINIMUM DESIGN MOMENT

x-dir

	Distance from the outermost fibre of concrete element to the center of rebr in x direction	d_x	0.274	m	
		η_x	0.125	-	*taken from DIN EN 1992-1-1:2004, Table NA.6.1.1
		$m_{Ed,x}$	112.5	kNm	
		b_y	2.04	m	
		$a_{sx,min}$	**10.5**	**cm²/m**	
		$a_{sx,\ provided}$	**11.3**	**cm²/m**	*provided: φ12/100mm
	y-dir				
	Distance from the outermost fibre of concrete element to the center of rebr in y direction	d_y	0.262	m	
		η_y	0.125	-	*taken from DIN EN 1992-1-1:2004, Table NA.6.1.1
		$m_{Ed,y}$	112.5	kNm/m	
		b_x	2.04	m	
		$a_{sy,\ min}$	**11.0**	**cm²/m**	
		$a_{sy,\ provided}$	**11.3**	**cm²/m**	*provided: φ12/100mm
	Average d	d_m	0.268	m	*EN 1992-1-1:2004 Eq. (6.32)
	Control perimeter at 2d	u_1	4.57	m	*EN 1992-1-1:2004 Clause 6.4.2(1)
	Coefficient β for inner columns	β	1.15	-	*EN 1992-1-1:2004 Fig. 6.21N
F.	**PUNCHING SHEAR VERIFICATION**				
F1.	**Design shear stress at u_1**	**v_{Ed}**	**0.845**	**MPa**	*EN 1992-1-1:2004 Eq. (6.38)
F2.	**Punching shear resistance of slabs without shear reinforcement**	**$v_{Rd,c}$**	**0.521**	**MPa**	*EN 1992-1-1:2004 Eq. (6.47)
	0,18/ γ_c	$C_{Rd,c}$	0.12		
	Reinforcement ratio	ρ_l	0.0042		
	Longitudinal reinforcement in x direction	ρ_{lx}	0.0041		
	Longitudinal reinforcement in y direction	ρ_{ly}	0.0043		
		k_1	0.1		*using recommended value in EN 1992-1-1:2004 Eq. (6.47)
	Minimum shear stress	**v_{min}**	**0.488**	**MPa**	*EN 1992-1-1:2004 Eq. (6.3N)
	→ **Shear reinforcement is required.**				
F3.	**Limiting zone, in which shear reinforcement is required**				
	Outer control perimeter	u_{out}	7.410	m	*shear reinforcement can only be placed from the column face to 586 mm (distance 1,5*d measured from outer control perimeter). *EN 1992-1-1:2004 Eq. (6.54)
	Distance from the column face to outer control perimeter	r_{out}	0.988	m	0.586 m
	*inner value for constructive purpose	e	0.617	m	* using guidance from LinkStud PSR
	*inner value for constructive purpose	g	1.193	m	
	*inner value for constructive purpose	g_1	0.627	m	
	1st stud from column face	0,5d	0.134	m	

VGU Vietnamese-German University

Chosen		130	mm	
Distance between 1st stud to last stud		0.497	m	
Chosen s_r	3 @	165	mm	
Maximum stud distance	$s_{t,\,1,5}$	0.402	m	
	$s_{t,\,last}$	0.536	m	

F4. Shear arrangement parameters

Radial spacing	s_r	165	mm
Tangential spacing	s_t	413	mm

F5.	**Punching shear reinforcment required at the control perimeter per stud**	**A_{sw}**	**60.04**	**mm²**
	Shear stress at the control perimeter u1	v_{Ed}	0.845	MPa
	Shear resistance of concrete member	$v_{Rd,c}$	0.521	MPa
	Control perimeter	u_1	4568	mm
	Radial spacing	s_r	165	mm
	Number of rails	n	12	mm
	Effective design yield strength of shear reinforcement	$f_{ywd,eff}$	317.0	MPa *EN 1992-1-1:2004 Eq. (6.52)
	Chosen stud diameter	**φ10**	**78.54**	**mm²**
	Utilization rate		1.3	
F6.	**Punching shear resistance of slabs with shear reinforcement**	**$v_{Rd,cs}$**	**0.985**	**MPa** *EN 1992-1-1:2004 Eq. (6.52)

VGU Vietnamese-German University

F7. Confirmation check for constructive rules

center of column to 1st stud	303	mm			
distance to 3rd stud from center of column	633	mm			
distance to 3rd stud from column face	460	mm			
distance to last stud from center of column	798	mm			
distance to last stud from column face	625	mm	<	586	mm
$s_{t,\,1,5}$	328	mm	<	402	mm
$s_{t,\,last}$	413	mm	<	536	mm

F8. Shear at the column face

Control perimeter	u_0	1.2	m	
Shear stress at u_0	**$v_{Ed,0}$**	**3.218**	**MPa**	
Maximum shear resistance of concrete strut	**$v_{Rd,max}$**	**5.280**	**MPa**	

Legend
Input values
Self-generated values
Output values

B.4 Shear and Punching Calculations (EN 1992-1-1: 2023)

VGU
Vietnamese-German University

SIMPLY-SUPPORTED BEAM

A. MATERIAL PROPERTIES

Concrete grade	C30/37			
Characteristic compressive strength of concrete	f_{ck}	30	MPa	
Concrete modulus of elasticity	$E_{cm} * 10^{-3}$	32	GPa	* assumed using quartzite aggregates, EN 1992-1-1:2023 Eq. (5.1)
Partial safety factor of concrete	γ_c	1.5	-	
Factor that account for the effect high sustained loads and loading time	k_{tc}	1.0	-	*assumed using concrete
Coefficient that account for undisturbed compressive strength of a cylinder and the effective compressive strength developed later	η_{cc}	1.0	-	*EN 1992-1-1:2023 Eq. (5.4)
Design compressive strength of concrete	f_{cd}	20	MPa	*EN 1992-1-1:2023 Eq. (5.3)
Steel grade	B500			
Characteristic yield strength of steel	f_{yk}	500	MPa	
Steel modulus of elasticity	E_s	200	GPa	
Partial safety factor of steel	γ_s	1.15	-	
Design yield strength of steel	f_{yd}	435	MPa	

B. GEOMETRY OF CROSS SECTION

Width of cross-section	b	0.3	m
Height of cross-section	h	0.3	m
Width of support	t	0.3	m
Length of beam	l	3.5	m
Effective length of beam	l_{eff}	3.2	m

VGU Vietnamese-German University

C. LOAD ACTION, SAFETY CONCEPT AND FORCES

C1. Dead Load

Self-weight of concrete	$g_{1,k}$	2.3	kN/m
Design dead load	$g_{1,d}$	3.0	kN/m

C2. Live Load

Live load	q_k	80.0	kN/m
Design live load	q_d	120.0	kN/m

C3. Internal forces

Design value of moment	M_{Ed}	157.5	kNm
Design value of shear force	V_{ed}	196.9	kN
Reduced value of designed shear force	V_{Ed*}	146.4	kN

D. CONCRETE COVER

	TOP	BOTTOM
Exposure class	XC1	XC1
Minimum concrete grade	C16/20	C16/20

Allowance for deviation	c_{dev}	10		mm
Pre-selected main rebar	$d_{s,2}$	20	20	mm
Minimum cover of main rebar	$c_{min,2}$	20	20	mm
Nominal cover of main rebar	$c_{nom,2}$	30	30	mm
Pre-selected stirrup	$d_{s,1}$	10		mm
Minimum cover of stirrup	$c_{min,1}$	10		mm
Nominal cover of stirrup	$c_{nom,1}$	20		mm
Chosen concrete cover	c_v	20	20	mm
Distance from the face of member to the centre of longitudinal reinforcement	d_1	4		cm
Static depth from the outermost fibre of compression zone to the center of rebars	d	0.26		m
Allowance of crack width	w_{max}	0.4		mm

E. BENDING DESIGN USING W-METHOD

Design value of moment	M_{Ed}	0.157		MNm
Width of cross section	b	0.30		m
Static depth from the outermost fibre of compression zone to the center of rebars	d	0.260		m
Design compressive strength of concrete	f_{cd}	20		MPa
Design yield strength of steel	f_{yd}	435		MPa
	u_{Eds}	0.389		-
	ω	0.537		-
	$A_{s1,req}$	19.27		cm²
Selection of longitudinal rebars		4φ25	19.63	cm²

VGU Vietnamese-German University

F. SHEAR ACCORDING TO EN 1992-1-1:2023 CLAUSE 8.2

*applicable only to EN 1992-1-1:2023 Eq. (8.37)

ALTERNATIVE OF d: a_v

Average shear stress over cross section	**τ_{Ed}**	**2.086**	MPa	a_{cs}	0.80	m
Design value of shear force	V_{ed}*	146.4	kN	a_v	0.23	m
Width of the web	b_w	0.3	m			
Lever arm 0,9d	z	0.234	m			

F1. Shear resistance of member without shear reinforcement

F1a. Minimum shear stress resistance of member	**$\tau_{Rdc,min}$**	**0.809**	MPa	
Partial safety factor of shear	γ_v	1.40	-	
Characteristic compressive strength of concrete	f_{ck}	30	MPa	
Design yield strength of steel	f_{yd}	435	MPa	
Maximum aggregate size	D_{lower}	32	mm	
Effective depth	d	260	mm	

USING a_v:

F1b. Shear stress resistance of concrete	**$\tau_{Rd,c}$**	**1.068**	MPa

$\tau_{Rd,c}$	**1.115**	**N/mm²**

Reinforcement ratio	ρ_l	0.0252	-	*unable to locate the permitted maximum for reinforcement ratio	

→ **Shear reinforcement needed**

F2. Shear resistance of member with shear reinforcement

Limitation of strut angle	**cotθ**	**1.2**		**cotθ**	**2.5**	
Angle of the concrete compression strut	θ	39.8	degree	θ	21.8	degree
Shear reinforcement per unit length	$\mathbf{a_{sw}}$	**11.99**	**cm²/m**	$\mathbf{a_{sw}}$	**5.75**	cm²/m
Check of compression stress in compression field	σ_{cd}	4.2	N/mm²	σ_{cd}	6.0	N/mm²
Selection of stirrups	2 legs φ10/12,5	12.56	cm²/m	2 legs φ8/15	6.70	cm²/m
Utilization rate		1.0			1.16	

F3. Check of concrete strut

Maximum shear resistance of concrete	$\tau_{Rdc,max}$	**2.88**	N/mm²	
Maximum of compressive stress in compression field	$\tau_{Rd,max}$	**4.92**	N/mm²	*assumed ν = 0,5

4.92 > 2.09 MPa

F4. Minimum required shear reinforcement

	$\mathbf{a_{sw,min}}$	**2.63**	**cm²/m**	*EN 1992-1-1:2004, Clause 12.2(4)

Legend
Input values
Self-generated values
Output values

VGU
Vietnamese-German University

AT INNER COLUMN

A. MATERIAL PROPERTIES

Concrete grade		C30/37		
Characteristic compressive strength of concrete	f_{ck}	30	MPa	
Concrete modulus of elasticity	$E_{cm} * 10^{-3}$	32	GPa	* assumed using quartzite aggregates, EN 1992-1-1:2023 Eq. (5.1)
Partial safety factor of concrete	γ_c	1.5	-	
Coefficient that account for long-term effects and unfavorable effects	k_{tc}	1.0	-	*assumed using concrete class CN with $t_{ref} < 28$ days
Coefficient that account for undisturbed compressive strength of a cylinder and the effective compressive strength developed later	η_{cc}	1.0	-	*EN 1992-1-1:2023 Eq. (5.4)
Design compressive strength of concrete	f_{cd}	20	MPa	*EN 1992-1-1:2023 Eq. (5.3)
Steel grade		B500A		
Characteristic yield strength of steel	f_{yk}	500	MPa	
Steel modulus of elasticity	E_s	200	GPa	
Partial safety factor of steel	γ_s	1.15	-	
Design yield strength of steel	f_{yd}	435	MPa	

B. GEOMETRY OF CROSS SECTION

Thickness of slab	t	300	mm
Length #1 of the slab	l_1	6.8	m
Length #2 of the slab	l_2	6.8	m
Column's dimension	c_1	0.30	m
	c_2	0.30	m

VGU Vietnamese-German University

C. LOAD ACTION, SAFETY CONCEPT AND FORCES

Design value of normal force	N_{Ed}	900.0	kN

D. CONCRETE COVER

		TOP	BOTTOM	
Exposure class		XC1	XC1	
Minimum concrete grade		C16/20	C16/20	
Allowance for deviation	c_{dev}	10		mm
Pre-selected main rebar	$d_{s,2}$	12	12	mm
Minimum cover of main rebar	$c_{min,2}$	12	12	mm
Nominal cover of main rebar	$c_{nom,2}$	22	22	mm
Pre-selected stirrup	$d_{s,1}$	10		mm
Minimum cover of stirrup	$c_{min,1}$	10		mm
Nominal cover of stirrup	$c_{nom,1}$	20		mm
Concrete cover	c_v	20	20	mm
Chosen concrete cover	c_v	20		mm
	d_1	36		mm
Static depth from the outermost fibre of compression zone to the center of rebars	d	264.0		mm

	Allowance of crack width	w_{max}	0.4	mm	

G MINIMUM DESIGN MOMENT

x-dir

Distance from the outermost fibre of concrete element to the center of rebr in x direction	d_x	0.274	m	
	η_x	0.125	-	*taken from DIN EN 1992-1-1:2004, Table NA.6.1.1
	$m_{Ed,x}$	112.5	kNm	
	b_y	2.04	m	
	$a_{sx,min}$	**10.5**	**cm²/m**	
	$a_{sx,\ provided}$	**11.3**	**cm²/m**	*provided: φ12/100mm

y-dir

Distance from the outermost fibre of concrete element to the center of rebr in y direction	d_y	0.262	m	
	η_y	0.125	-	*taken from DIN EN 1992-1-1:2004, Table NA.6.1.1
	$m_{Ed,y}$	112.5	kNm/m	
	b_x	2.04	m	
	$a_{sy,\ min}$	**11.0**	**cm²/m**	
	$a_{sy,\ provided}$	**11.3**	**cm²/m**	*provided: φ12/100mm

Shear-resisting effective depth	d_v	0.268	m	*assumed direct support, EN 1992-1-1:2023 Figure 8.17
Control perimeter at 0,5d	$b_{0,5}$	2.04	m	*EN 1992-1-1:2023 Figure 8.18
Coefficient β for inner columns	β	1.15		*EN 1992-1-1:2023 Table 8.3

VGU Vietnamese-German University

F. SHEAR VERIFICATION

F1.	**Design shear stress at $b_{0,5}$**	**τ_{Ed}**	**1.891**	**MPa**	*EN 1992-1-1:2023 Eq. (8.92)
F2.	**Punching shear resistance of slabs without shear reinforcement**	**$\tau_{Rd,c}$**	**1.225**	**MPa**	*EN 1992-1-1:2023 Eq. (8.94)
		$0,6/\gamma_v$	0.43	-	
	Reinforcement ratio	ρ_l	0.0042	-	
	Longitudinal reinforcement in x direction	ρ_{lx}	0.0041	-	
	Longitudinal reinforcement in y direction	ρ_{ly}	0.0043	-	
	size effect	k_{pb}	2.31	-	
		d_{dg}	0.040	m	*assumed D_{lower} = 32mm EN 1992-1-1:2023 Clause 8.2.1(4)
	Minimum shear resistance	**$\tau_{Rd,c,min}$**	**0.80**	**MPa**	*EN 1992-1-1:2023 Eq. (8.20)

→ **Shear reinforcement is required.**

F3. Limiting zone, in which shear reinforcement is required

Outer control perimeter $b_{0,5,out}$	$b_{0,5,out}$	6.013	m	*EN 1992-1-1:2023 Eq. (8.112)
Distance from the column face to $b_{0,5,out}$	r_{out}	0.766	m	

F4. Shear arrangement parameters

	Radial spacing	s_r	150	mm	*EN 1992-1-1:2023 Clause 8.4.4(1)
	Tangential spacing	s_t	255	mm	*EN 1992-1-1:2023 Clause 8.4.4(1)
F5.	**Punching shear reinforcement required at the control perimeter per stud**	A_{sw}	**120.91**	**mm²**	*EN 1992-1-1:2023 Clause 8.4.4(1)
	Shear stress at the control perimeter $b_{0,5}$	τ_{Ed}	1.891	MPa	
	Shear resistance of concrete member	$\tau_{Rd,c}$	1.225	MPa	
	Control perimeter	$b_{0,5}$	2042	mm	
	Radial spacing	s_r	150	mm	
	Number of rails	n	8	-	*assumed based on the selection of shear reinforcement Peikko PSB
	Effective design yield strength of shear reinforcement	f_{ywd}	435	MPa	*assumed that shear reinforcements also reach 435 MPa
	Chosen stud diameter	**φ14**	**154**	**mm²**	
	Utilization rate		1.3		
F6.	**Punching shear resistance of slabs with shear reinforcement**	$\tau_{Rd,cs}$	**2.193**	**MPa**	*EN 1992-1-1:2023 Clause 8.4.4(1)
		η_c	0.65	-	
		η_s	0.80	-	
	Diameter of shear reinforcement	φ_w	0.01	m	
	Size parameter accounting for failure zone rough	d_{dg}	0.04	m	
	Shear-resisting effective depth of slab	d_v	0.27	m	
	Punching shear gradient enhancement coefficien	k_{pb}	2.31	-	
	Shear reinforcement ratio at the $b_{0,5}$	ρ_w	0.0040	-	
	The area of one leg of shear reinforcement	A_{sw}	154	mm²	
	Radial spacing	s_r	150	mm	
	Tangential spacing	s_t	255	mm	
	Design yield strength of shear reinforcement	f_{ywd}	435	MPa	
F7.	**Maximum shear resistance using studs**	$\tau_{Rd,\,max,studs}$	**1.98**	**MPa**	*EN 1992-1-1:2023 Clause 8.4.4(5)
	Maximum shear resistance using links and stirrups	$\tau_{Rd,\,max,links/stirrups}$	**1.73**	**MPa**	*EN 1992-1-1:2023 Clause 8.4.4(5)

Vietnamese-German University

Legend
Input values
Self-generated values
Output values

References

[1] Abad, B. F., Lantsoght, E. O. L., and Yang, Y. "Shear Capacity of Steel Fibre Reinforced Concrete Beams". *Proceedings of the fib Symposium 2019: Concrete - Innovations in Materials, Design and Structures*. Ed. by W. Derkowski et al. 2019, pp. 1710–1717.

[2] Autrup, F. et al. "Mechanical modeling of dowel action and the influence of small amounts of shear reinforcement on the shear-transfer actions in RC beams". *Structural Concrete* 24.5 (2023), pp. 5928–5946. DOI: 10.1002/suco.202300082.

[3] Baekeland, P. *EN 1992-1-1:2023*. https://www.youtube.com/watch?v=1a3SmPS23sY&list=PLd-ttCdJenKCRf9pnMqwmQMwfdHLByf-0. YouTube video, Concrete Engineering.

[4] Bažant, Z. P. and Sun, H.-H. "Size Effect in Shear Failure of Longitudinally Reinforced Beams". *ACI Structural Journal* 84.2 (1987), pp. 150–160.

[5] Cavagnis, F., Fernández Ruiz, M., and Muttoni, A. "A mechanical model for failures in shear of members without transverse reinforcement based on development of a critical shear crack". *Engineering Structures* 157 (2018), pp. 300–315. DOI: 10.1016/j.engstruct.2017.12.004.

[6] CEN. *EN 1992-1-1: Eurocode 2 — Design of Concrete Structures — Part 1-1: General Rules and Rules for Buildings*. 2004.

[7] CEN. *EN 1992-1-1: Eurocode 2 — Design of Concrete Structures — Part 1-1: General rules and rules for buildings, bridges and civil engineering structures*. 2023.

[8] European Commission Joint Research Centre. *Overview of the Evolution of EN 1992: Design of Concrete Structures*. JRC overview slides, accessed 2026-03-28. Dec. 2021.

[9] Fernández Ruiz, M. and Muttoni, A. "Application of Critical Shear Crack Theory to Punching of Reinforced Concrete Slabs with Transverse Reinforcement". *ACI Structural Journal* 106-S46 (2009), pp. 485–494.

[10] Fernández Ruiz, M. and Muttoni, A. "Size effect in shear and punching shear failures of concrete members without transverse reinforcement: Differences between statically determinate members and redundant structures". *Structural Concrete* 19.1 (2018), pp. 65–75. DOI: 10.1002/suco.201700059.

[11] Gołdyn, M. and Michalak, A. "EN 1992-1-1:2023 – a new look at the issue of punching shear design". *Archives of Civil Engineering* 71.3 (2025), pp. 181–198. DOI: 10.24425/ace.2025.155093.

VGU Vietnamese-German University

[12] Guo, Z. "Chapter 14 - Strength of Member Under Shear Force". *Principles of Reinforced Concrete*. Ed. by Z. Guo. Oxford: Butterworth-Heinemann, 2014, pp. 349–384. ISBN: 978-0-12-800859-1. DOI: 10.1016/B978-0-12-800859-1.00014-1.

[13] Henderson, N. A., Johnson, R. A., and Wood, J. G. M. *Enhancing the Whole Life Structural Performance of Multi-Storey Car Parks*. Mott MacDonald and Office of the Deputy Prime Minister, 2002.

[14] Huber, P., Huber, T., and Kollegger, J. "Investigation of the shear behavior of RC beams on the basis of measured crack kinematics". *Engineering Structures* 113 (2016), pp. 41–58. DOI: 10.1016/j.engstruct.2016.01.025.

[15] Kragh-Poulsen, J.-C., Nielsen, M. P., and Goltermann, P. "Shear strength of straight concrete members without shear reinforcement. Reassessment of the effectiveness factors used in the crack sliding theory". *Structural Concrete* 21.3 (2020), pp. 966–982. DOI: 10.1002/suco.202000053.

[16] LinkStudPSR Limited. *Design Manual to EC2: BS EN 1992-1-1:2004*. Version 3.2. Punching shear reinforcement design manual. LinkStudPSR Limited. Oct. 2022.

[17] Muttoni, A. et al. "A mechanical approach for the punching shear provisions in the second generation of Eurocode 2". *Hormigón y Acero* (2022). ISSN: 0439-5689. DOI: 10.33586/hya.2022.3091.

[18] Muttoni, A. "Punching Shear Strength of Reinforced Concrete Slabs without Transverse Reinforcement". *ACI Structural Journal* 105.4 (2008), pp. 440–450. DOI: 10.14359/19858.

[19] Olalusi, O. B. "Present State of Eurocode 2 Variable Strut Inclination Method for Shear Design and Possible Improvement". *Structures* 19 (2019), pp. 48–57. ISSN: 2352-0124. DOI: 10.1016/j.istruc.2018.11.016.

[20] Ospina, C. E. and Hawkins, N. M. "Addressing Punching Failure: Considerations to Prevent Premature Concentric Punching Shear Failure in Reinforced Concrete (RC) Two-Way Slabs". *Structure Magazine* (2013), pp. 14–16.

[21] Peikko Group. *PSB® Durchstanzbewehrung: Technisches Handbuch*. Version DE 11/2020. Peikko Group. 2020.

[22] Pérez Caldentey, A. *EN 1992 'Eurocode 2: Design of Concrete Structures*. In *The Second Generation Eurocodes: Key Changes and Benefits Through Design Examples*, Online workshop, 3–5 June 2025. Workshop slides, accessed 2026-03-28. European Commission Joint Research Centre, 2025.

[23] Rombach, G., Kohl, M., and Nghiep, V. "Shear Design of Concrete Members without Shear Reinforcement—A Solved Problem?" *Procedia Engineering* 14 (2011). The Proceedings of the Twelfth East Asia-Pacific Conference on Structural Engineering and Construction, pp. 134–140. ISSN: 1877-7058. DOI: 10.1016/j.proeng.2011.07.015.

VGU Vietnamese-German University

[24] Sadeghian, V. and Vecchio, F. J. "The Modified Compression Field Theory: Then and Now". *Shear in Structural Concrete*. Ed. by D. Mitchell and A. Belarbi. ACI SP-328. American Concrete Institute, 2018, pp. 3.1–3.20.

[25] Sagaseta, J. and Vollum, R. L. "Influence of beam cross-section, loading arrangement and aggregate type on shear strength". *Magazine of Concrete Research* 63.2 (2011), pp. 139–155. DOI: 10.1680/macr.9.00192.

[26] Valença, J. and Carmo, R. N. F. "Evaluation of the shear transfer mechanisms in reinforced concrete beams using photogrammetry". *Structural Concrete* 21.1 (Apr. 2019), pp. 333–348. ISSN: 1751-7648. DOI: 10.1002/suco.201800279.

[27] Zsutty, C. T. "Beam Shear Strength Prediction by Analysis of Existing Data". *Journal Proceedings Volume: 65 Issue: 11, p. 943-951*. 1968.

VGU
Vietnamese-German University

Structural Concrete Research Group

Bachelor Thesis Series

A. Shear, Punching, Torsion

[2026] **Dang My Kao Kim, Nguyen**

Shear and Punching Shear Design of Reinforced Concrete Structures according to the New Generation of Eurocode 2. Vietnamese-German University, **BCE-2026-01**.

Supervisors: Dr.-Ing. habil. Ngoc Linh Tran, Prof.-Ing. Christian Kulas

[2026] **Viet Hung, Nguyen**

Effect of longitudinal reinforcement distribution on the shear strength of slender concrete members without shear reinforcement. Vietnamese-German University, **BCE-2026-03**.

Supervisors: Dr.-Ing. habil. Ngoc Linh Tran, Prof.-Ing. Christian Kulas

B. Cracking

[2026] **Ngoc Anh Thu, Nguyen**

Cracking in Reinforced Concrete Structures. Vietnamese-German University, **BCE-2026-02**.

Supervisors: Dr.-Ing. habil. Ngoc Linh Tran, Prof.-Ing. Christian Kulas

VGU
Vietnamese-German University